# NK 315-1,2-1 U



Duct electric heater with temperature controller or control unit

- Casing material: Galvanized steel

| | Unit of measurement | NK 315-1,2-1 U |
|---|---|---|
| Connected air duct size | mm | 315 |
| Phases | - | 1 |
| Minimum supply voltage | V | 230 |
| Maximum supply voltage | V | 230 |
| Power supply frequency | Hz | 50 |
| Rated power | W | 1200 |
| Weight | kg | 1 |

## Dimensions

| Ø D | B | H | L | L1 |
|---|---|---|---|---|
| 313 | 174 | 425 | 306 | 228 |

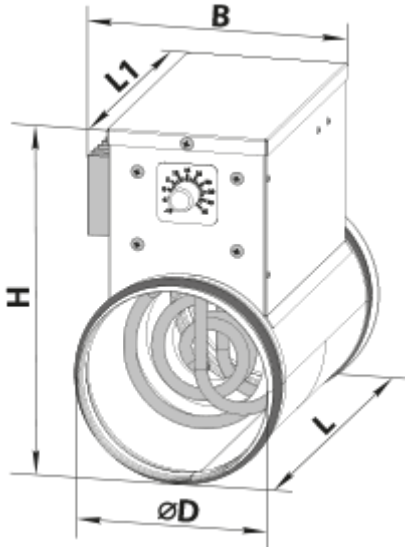


## Accessories

### Outdoor temperature sensors

| Name | Photo | Description |
|---|---|---|
| KDT2-M 100 |  | Duct temperature sensors |
| KDT2-M 150 |  | Duct temperature sensors |
| KDT2-M 200 |  | Duct temperature sensors |
| KDT2-M 400 |  | Duct temperature sensors |
| KDT2-M1 100 |  | Duct temperature sensors |
| KDT2-M1 150 |  | Duct temperature sensors |
| KDT2-M1 200 |  | Duct temperature sensors |
| KDT2-M1 400 |  | Duct temperature sensors |
| KDT2-MK 100 |  | Duct temperature sensors with a terminal box |

| | | |
|---|---|---|
| KDT2-MK 150 |  | Duct temperature sensors with a terminal box |
| KDT2-MK 200 |  | Duct temperature sensors with a terminal box |
| KDT2-MK 400 |  | Duct temperature sensors with a terminal box |