NK 800x500-54,0-3

Rectangular electric inline heaters

- Casing material: Galvanized steel

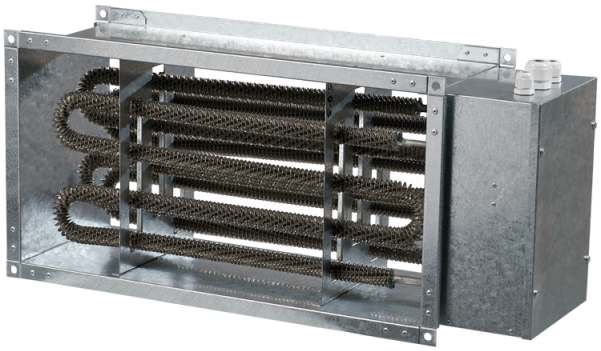

	Unit of measurement	NK 800x500-54,0-3
Phases	-	3
Minimum supply voltage	V	400
Maximum supply voltage	V	400
Power supply frequency	Hz	50
Rated power	W	54000
Weight	kg	30

Dimensions

B	B1	B2	H	H1	H2	L
800	820	940	500	520	540	750

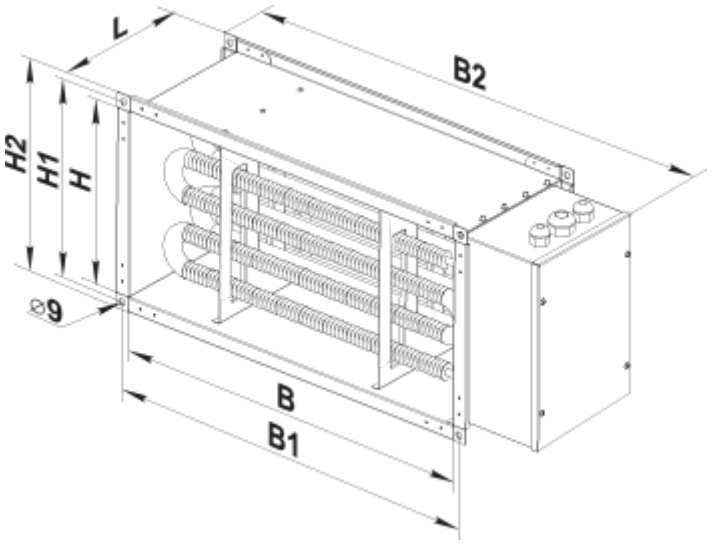

Accessories

Outdoor temperature sensors

Name	Photo	Description
KDT2-M 100		Duct temperature sensors
KDT2-M 150		Duct temperature sensors
KDT2-M 200		Duct temperature sensors
KDT2-M 400		Duct temperature sensors
KDT2-M1 100		Duct temperature sensors
KDT2-M1 150		Duct temperature sensors
KDT2-M1 200		Duct temperature sensors
KDT2-M1 400		Duct temperature sensors
KDT2-MK 100		Duct temperature sensors with a terminal box

KDT2-MK 150		Duct temperature sensors with a terminal box
KDT2-MK 200		Duct temperature sensors with a terminal box
KDT2-MK 400		Duct temperature sensors with a terminal box

Electric triac temperature controllers

Name	Photo	Description
RNS-16		TRIAC power controller for electric heaters
RNS-25		TRIAC power controller for electric heaters