NK H2V2 550x550



Ventilation combined grille with unregulated vanes

• Casing material: Plastic

	Unit of measurement	NK H2V2 550x550

Dimensions

H	L	h	l
570	570	556	556

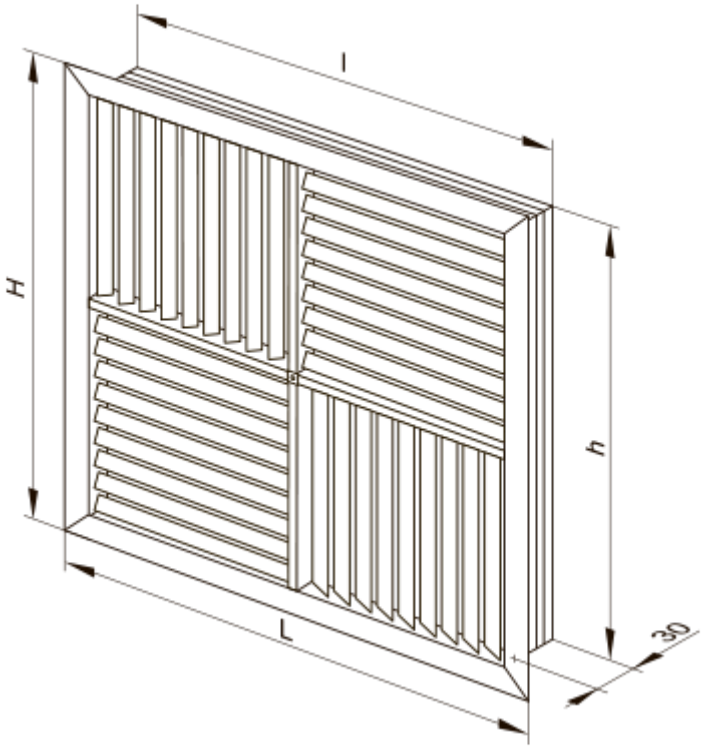
l
H
h
L
30