NKP 125-1,2-1



Inline heaters for heat exchanger frost protection

• Casing material: Galvanized steel

	Unit of measurement	NKP 125-1,2-1
Connected air duct size	mm	125
Phases	-	1
Minimum supply voltage	V	230
Maximum supply voltage	V	230
Power supply frequency	Hz	50/60
Rated power	W	1200

Dimensions

Ø D	B	H	L	L1
124	155	251	306	190

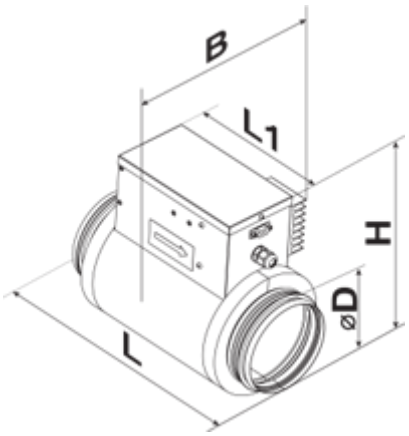
B
L1
H
ØD
L