NKP 150-0,8-1



Inline heaters for heat exchanger frost protection

• Casing material: Galvanized steel

	Unit of measurement	NKP 150-0,8-1
Connected air duct size	mm	150
Phases	-	1
Minimum supply voltage	V	230
Maximum supply voltage	V	230
Power supply frequency	Hz	50/60
Rated power	W	800

Dimensions

Ø D	B	H	L	L1
149	170	282	306	190

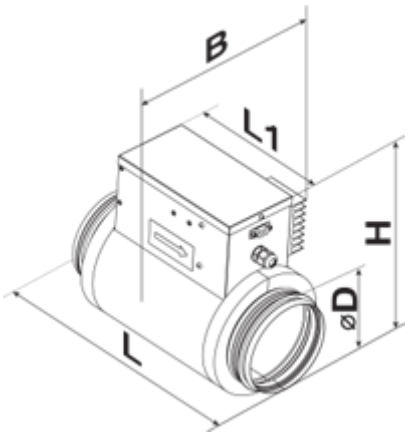
B
L1
H
ØD
L