NKP 200-1,7-1 A21 V.2

Inline heaters for heat exchanger frost protection

• Casing material: Galvanized steel

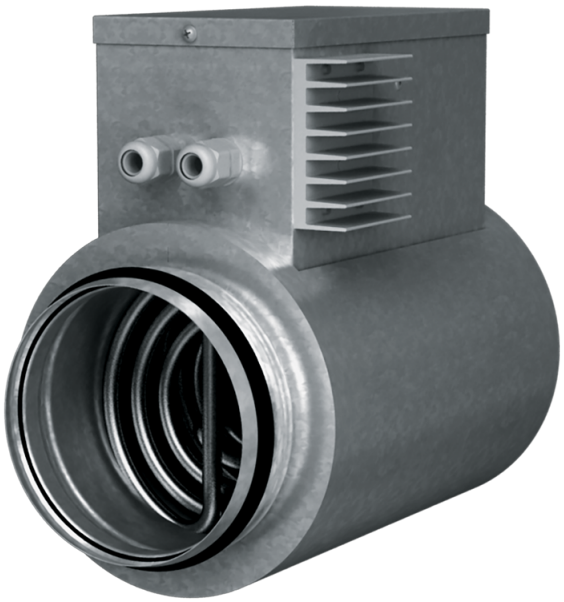

	Unit of measurement	NKP 200-1,7-1 A21 V.2
Connected air duct size	mm	200
Phases	-	1
Minimum supply voltage	V	230
Maximum supply voltage	V	230
Power supply frequency	Hz	50/60
Rated power	W	1700

Dimensions

D	B	H	L	L1
200	239	336	306	192

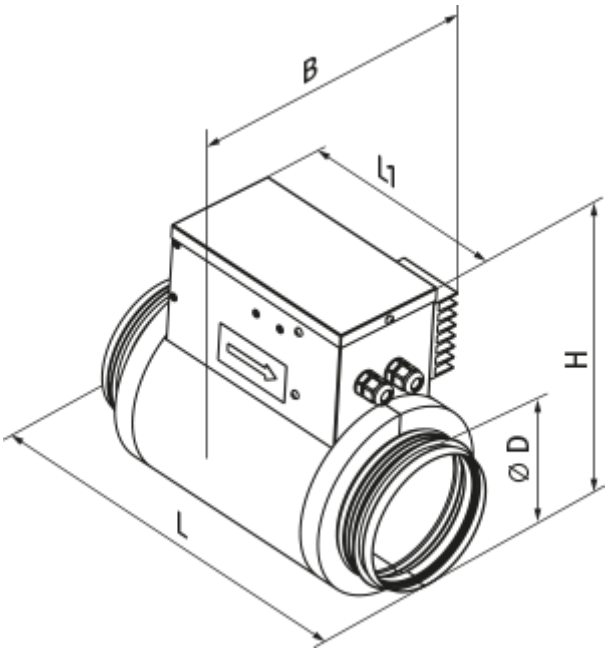
B
l1
H
Ø D
L