NKP 315-3,0-1 A21 V.2

Inline heaters for heat exchanger frost protection

• Casing material: Galvanized steel

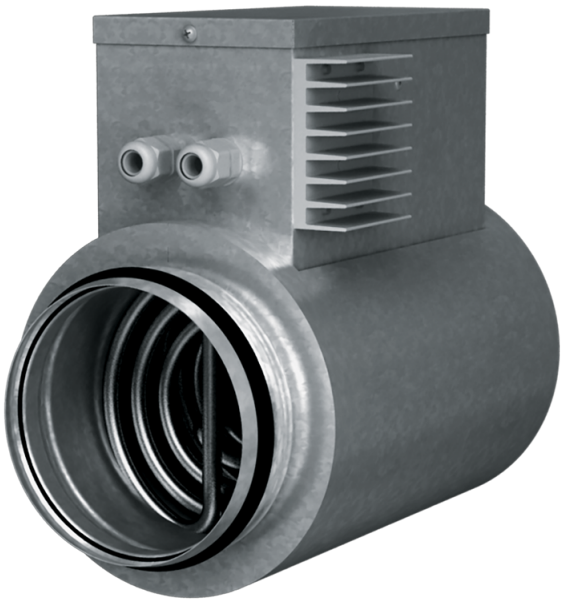

	Unit of measurement	NKP 315-3,0-1 A21 V.2
Connected air duct size	mm	315
Phases	-	1
Minimum supply voltage	V	230
Maximum supply voltage	V	230
Power supply frequency	Hz	50/60
Rated power	W	3000

Dimensions

D	B	H	L	L1
315	353	454	306	192

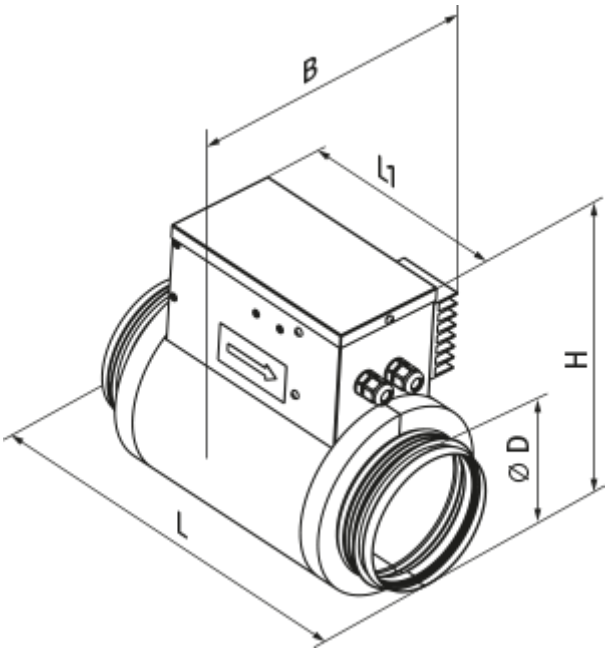
B
l1
H
Ø D
L