NKV 160-4



Inline water supply air heaters or heater for air handling units with a round cross-section

• Casing material: Galvanized steel

	Unit of measurement	NKV 160-4
Connected air duct size	mm	160
Weight	kg	8.2

Dimensions

D	B	H	H3	L	L1	L2	L3	K
159	400	280	200	300	28	65	220	G 3/4''

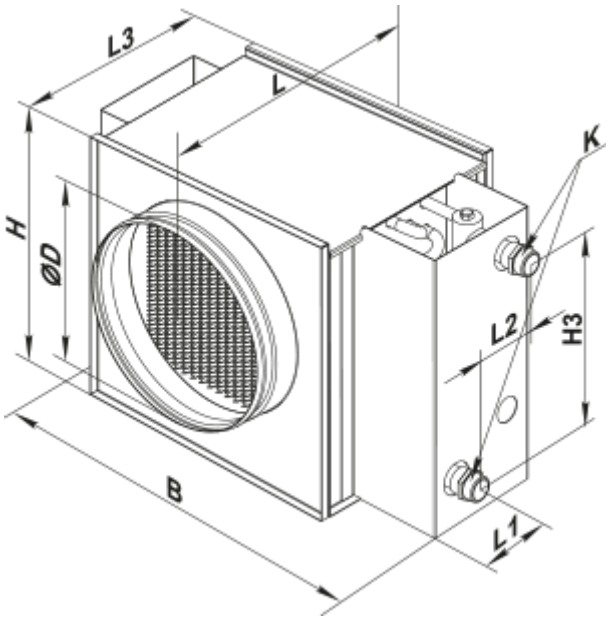
L3
L
K
H
ØD
L2
H3
B
L1