NKV 700x400-3

Inline water supply air heaters or heater for air handling units with a rectangular cross-section

- Casing material: Galvanized steel



	Unit of measurement	NKV 700x400-3
Weight	kg	28.4

Dimensions

B	B1	B2	B3	H	H1	H2	H3	L	L1	L2	K
700	720	740	865	400	420	440	350	200	42	58	G 1''

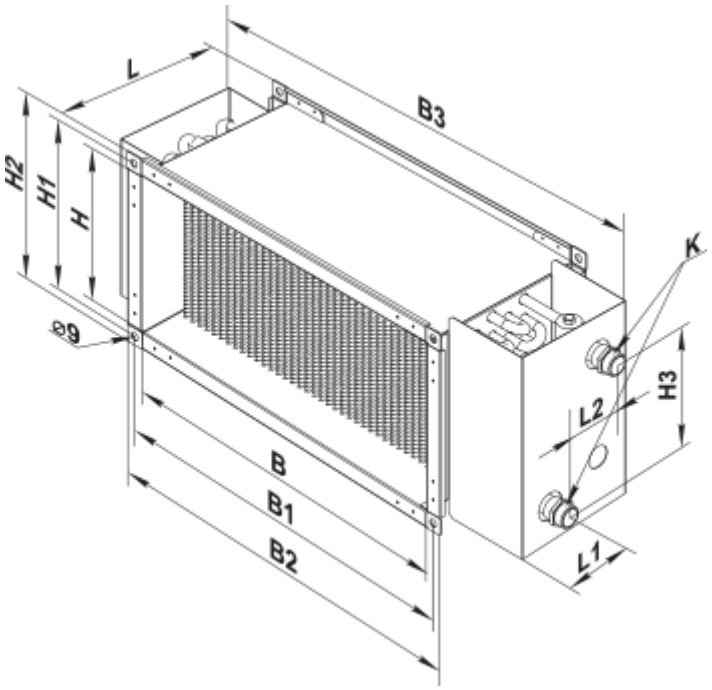
L
B3
H2
H1
H
K
Ø9
H3
L2
B
B1
B2
L1