OV1 150



Wall-mounted axial fans aluminium impellers

- Sound pressure level LpA at 3 m: 33
- Impeller type: Axial
- Casing material: Coated steel
- Installation in any position

	Unit of measurement	OV1 150	
Connected air duct size	mm	150	
Phases	-	1	
Maximum supply voltage	V	240	
Minimum supply voltage	V	220	
Power supply frequency	Hz	50	60
Rated power	W	26	
Unit current	A	0.19	
Maximum airflow	m^3/h	180	
Rotation speed at 50hz	-	1300	
Sound pressure level LpA at 3 m	dB(A)	33	
Weight	kg	2.5	
Transported air temperature (max)	°C	40	
Transported air temperature (min)	°C	-30	
Ingress protection rating	-	IP24	
Ingress protection rating of the drive	-	IP44	
Impeller material	-	Aluminium	

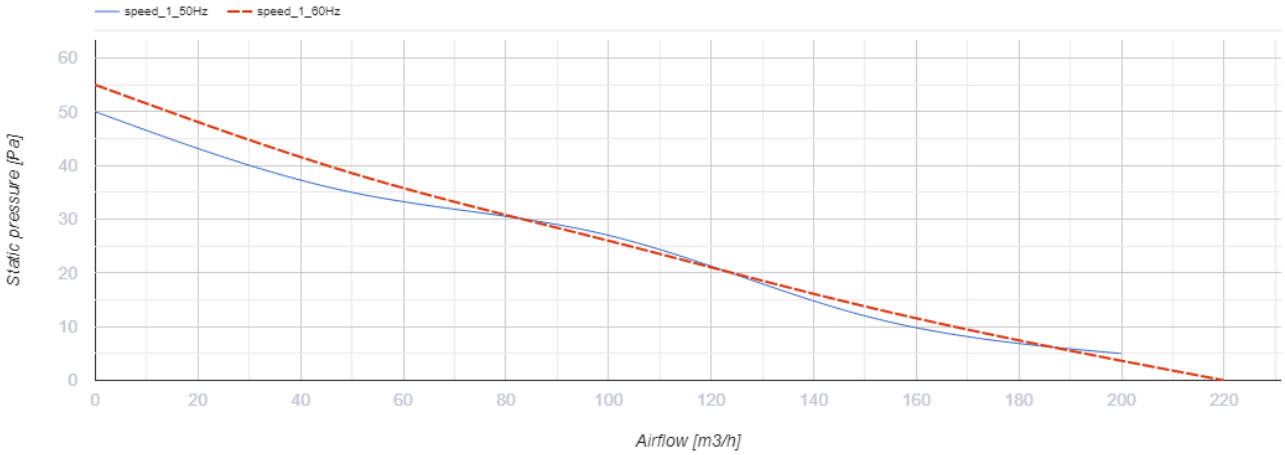

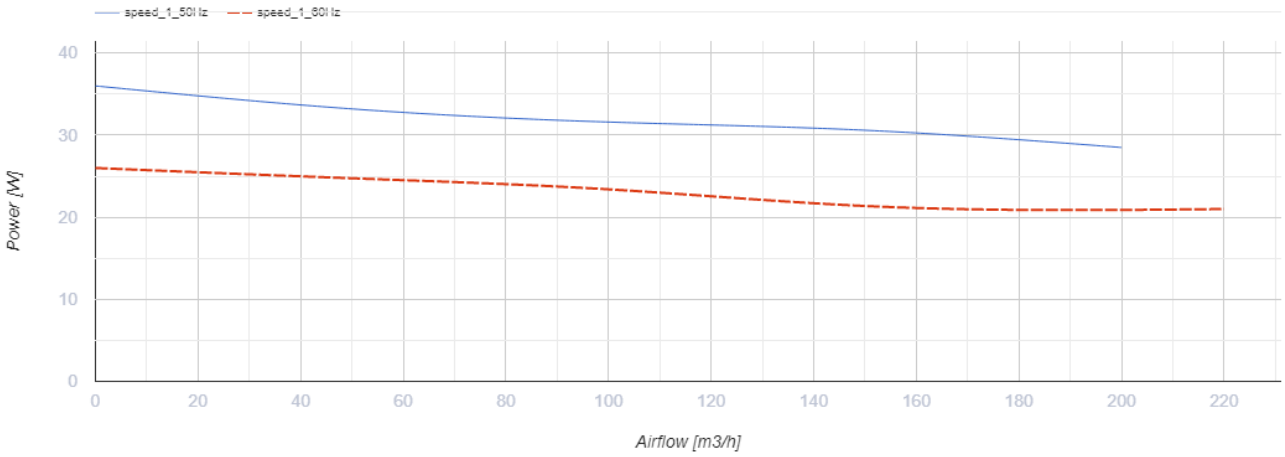

Dimensions

ØD	Ød	B	B1	L
162	7	250	210	120

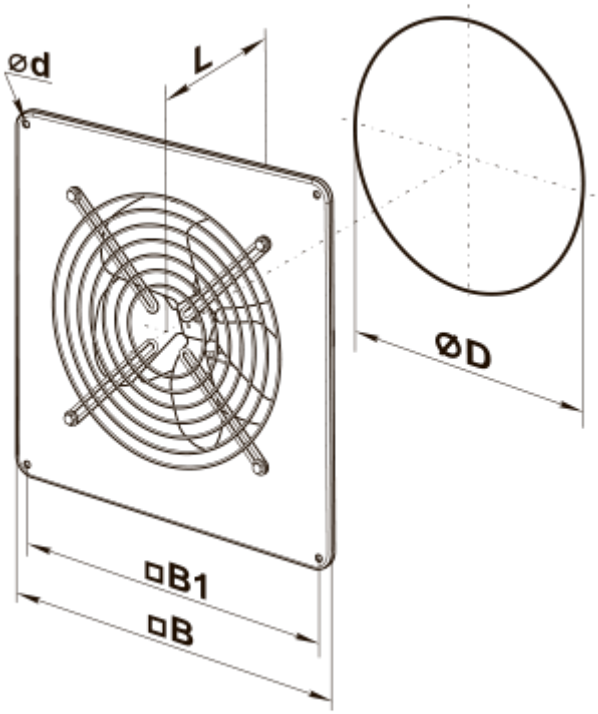
⌀d
L
⌀D
□B1
□B

Ecodesign

Trademark	Vents
Model	OV1 150
Type of drive installed	External MSD or VSD
Type of heat recovery system	None
Nominal external pressure (Pa)	27
Maximum external leakage rates (%)	2.7
Static efficiency (%)	2.8
Effective electric power input (kW)	0.027
Sound power level (dB(A))	53
Declared typology	NRVU UVU