OV1 200



Wall-mounted axial fans aluminium impellers

- Sound pressure level LpA at 3 m: 33
- Impeller type: Axial
- Casing material: Coated steel
- Installation in any position

	Unit of measurement	OV1 200	
Connected air duct size	mm	200	
Phases	-	1	
Maximum supply voltage	V	240	
Minimum supply voltage	V	220	
Power supply frequency	Hz	50	60
Rated power	W	33	
Unit current	A	0.23	
Maximum airflow	m^3/h	390	
Rotation speed at 50hz	-	1300	
Sound pressure level LpA at 3 m	dB(A)	33	
Weight	kg	3	
Transported air temperature (max)	°C	40	
Transported air temperature (min)	°C	-30	
Ingress protection rating	-	IP24	
Ingress protection rating of the drive	-	IP44	
Impeller material	-	Aluminium	

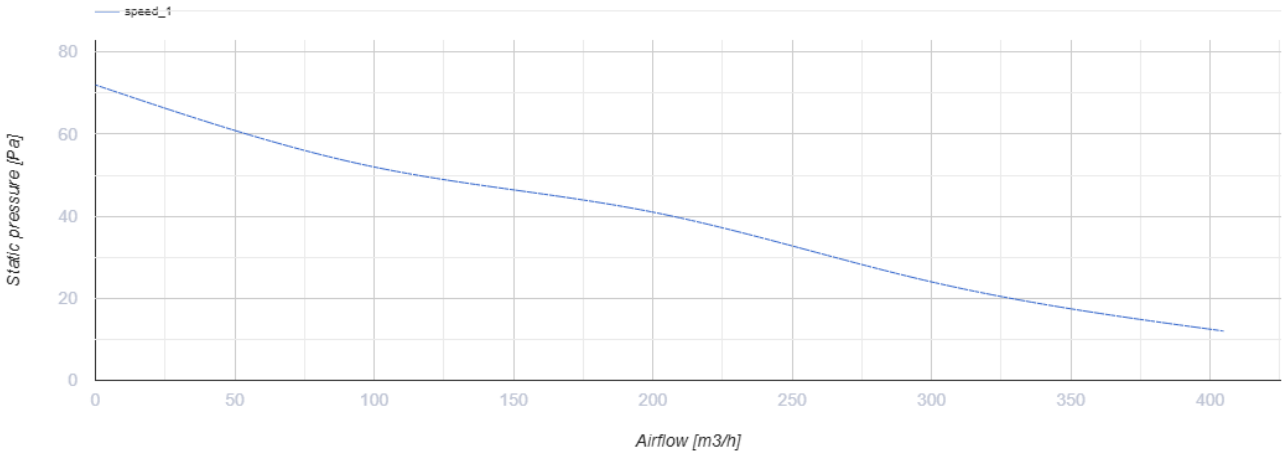

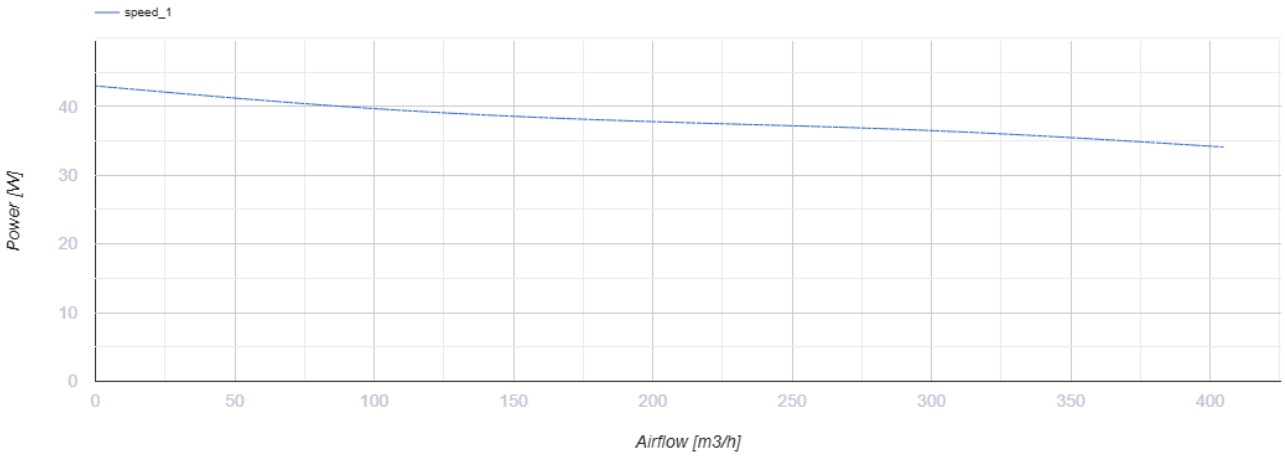

Dimensions

ØD	Ød	B	B1	L
208	7	312	260	120

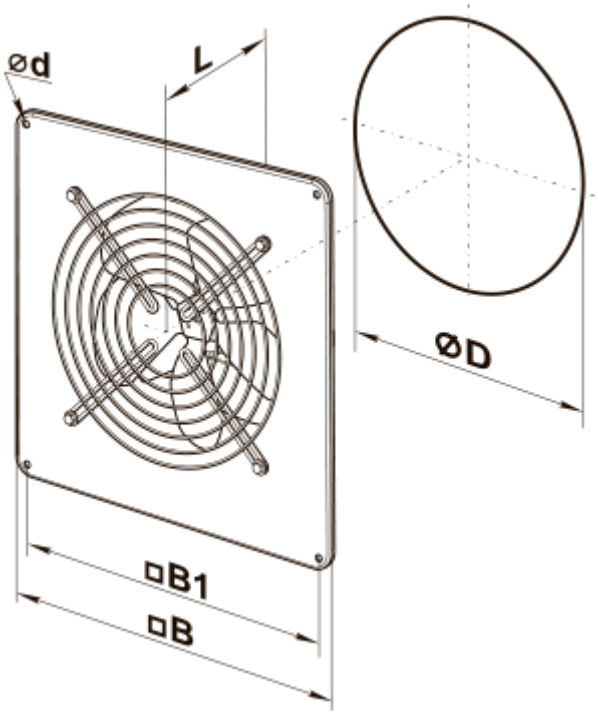
⌀d
L
⌀D
□B1
□B

Ecodesign

Trademark	Vents					
Model	OV1 200					
Specific energy consumption (SEC) (kWh/(m²/a))	Cold		Average		Warm	
	-48.1	A+	-26.4	B	-11.4	E
Type of ventilation unit	Unidirectional					
Type of drive installed	Variable speed					
Type of heat recovery system	None					
Maximum flow rate (m³/h)	405					
Electric power input (W)	43					
Reference flow rate (m³/s)	0.113					
Reference pressure difference (Pa)	10					
Specific power input (SPI) (W/(m³/h))	0.106					
Control typology	Local demand control					
Sound power level (dB(A))	52					
Declared typology	RVU UVU					
The annual electricity consumption (AEC) (kWh/a)	Cold		Average		Warm	
	69		69		69	
The annual heating saved (AHS) (kWh/a)	Cold		Average		Warm	
	5500		2800		1300	