OV1 315



Wall-mounted axial fans aluminium impellers

- Sound pressure level LpA at 3 m: 42
- Impeller type: Axial
- Casing material: Coated steel
- Installation in any position

	Unit of measurement	OV1 315	
Connected air duct size	mm	315	
Phases	-	1	
Minimum supply voltage	V	220	
Maximum supply voltage	V	240	
Power supply frequency	Hz	50	60
Rated power	W	110	
Unit current	A	0.75	
Maximum airflow	m^3/h	1700	
Rotation speed at 50hz	-	1300	
Sound pressure level LpA at 3 m	dB(A)	42	
Weight	kg	6.1	
Transported air temperature (max)	°C	40	
Transported air temperature (min)	°C	-30	
Ingress protection rating	-	IP24	
Ingress protection rating of the drive	-	IP44	
Impeller material	-	Aluminium	

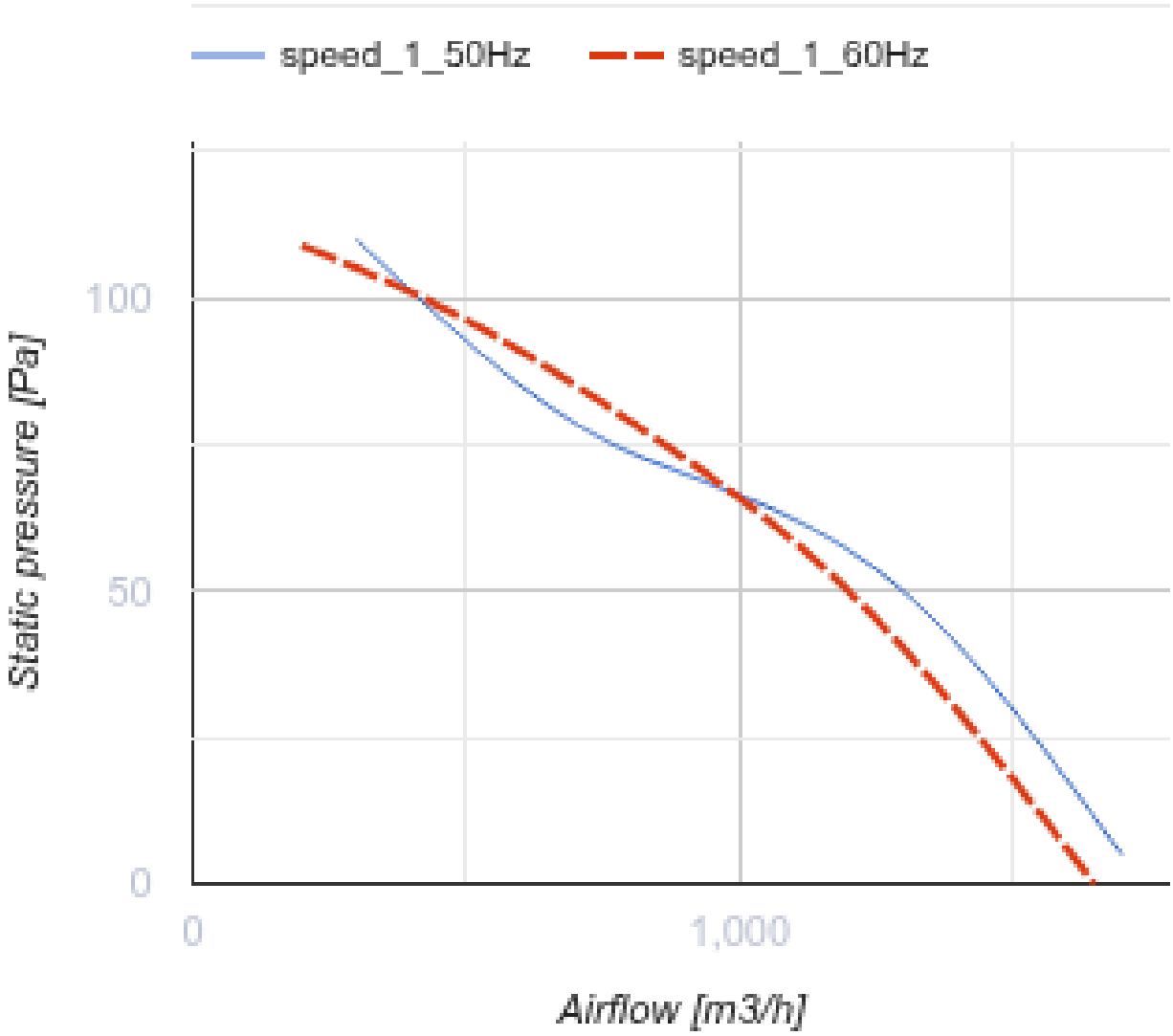
speed_1_50Hz
speed_1_60Hz
100
50
0
0
1,000
Static pressure [Pa]
Airflow [m3/h]

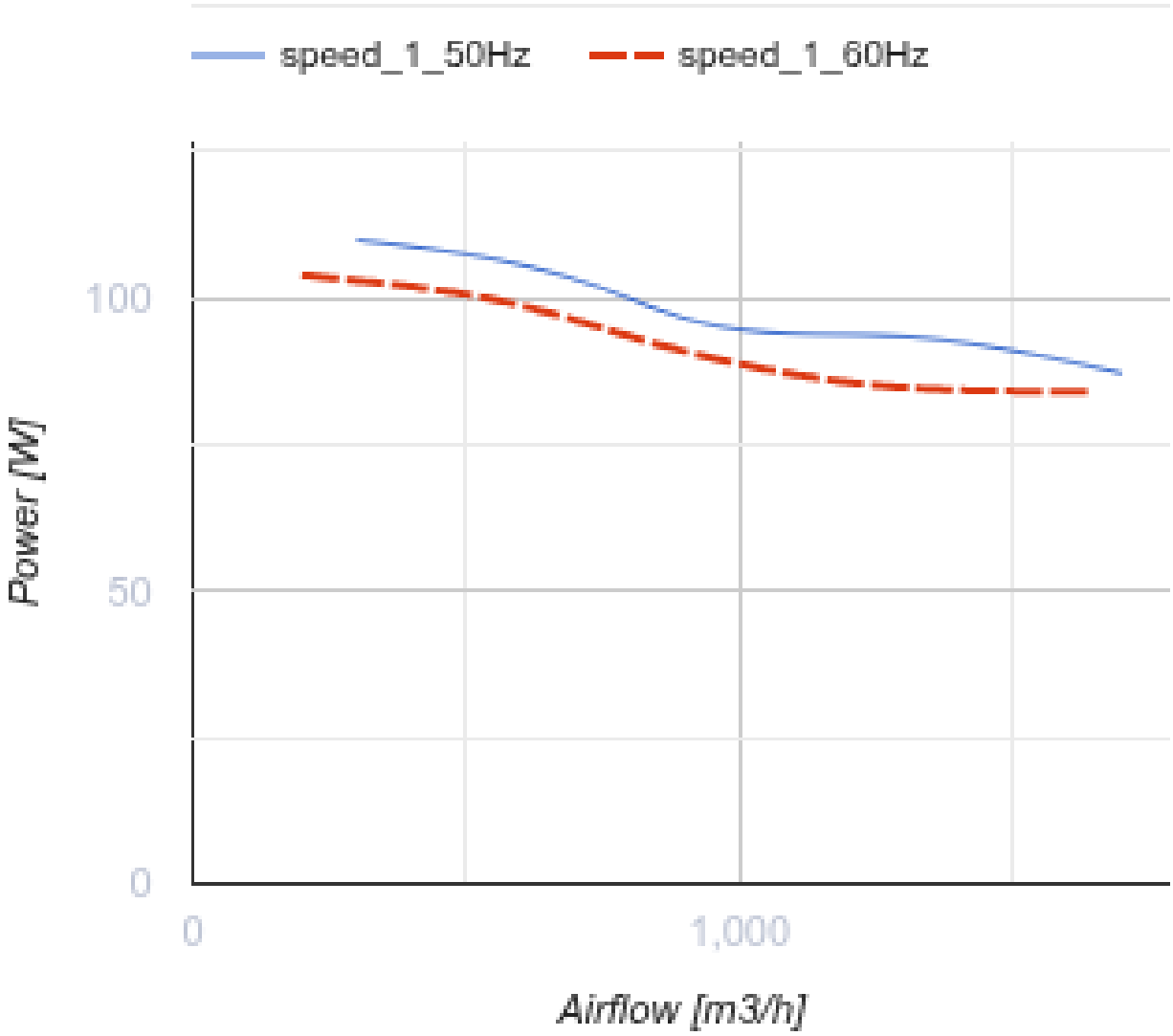

Dimensions

ØD	Ød	B	B1	L
312	9	430	380	170

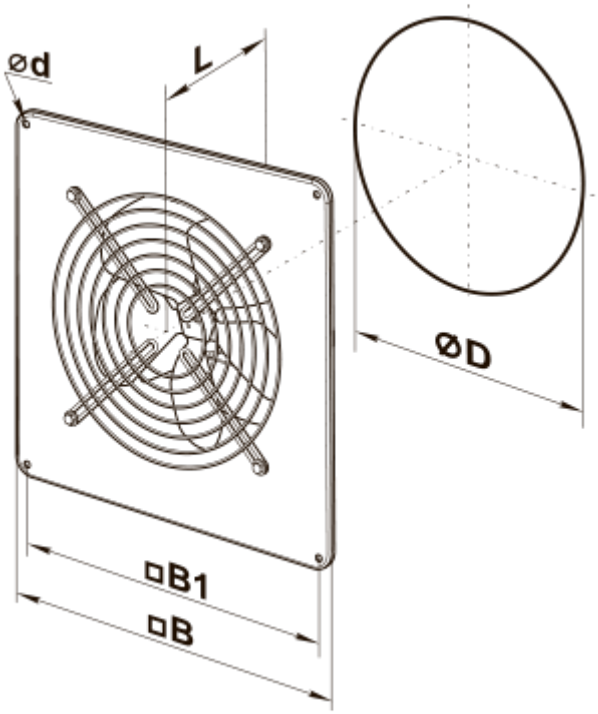
⌀d
L
⌀D
□B1
□B

Ecodesign

Trademark	Vents					
Model	OV1 315					
Specific energy consumption (SEC) (kWh/(m²/a))	Cold		Average		Warm	
	-55	A+	-27	B	-12	E
Type of ventilation unit	Unidirectional					
Type of drive installed	Variable speed					
Type of heat recovery system	None					
Maximum flow rate (m³/h)	1700					
Electric power input (W)	110					
Reference flow rate (m³/s)	0.331					
Specific power input (SPI) (W/(m³/h))	0.044					
Control typology	Local demand control					
Declared typology	RVU UVU					
Sound power level (dB(A))	62					
The annual electricity consumption (AEC) (kWh/a)	Cold		Average		Warm	
	34		34		34	
The annual heating saved (AHS) (kWh/a)	Cold		Average		Warm	
	5500		2800		1300	