OVK 200 EC



Wall-mounted axial fans with EC-motors

- Sound pressure level LpA at 3 m: 50
- Impeller type: Axial
- Casing material: Coated steel

	Unit of measurement	OVK 200 EC
Connected air duct size	mm	200
Phases	-	1
Minimum supply voltage	V	230
Maximum supply voltage	V	230
Power supply frequency	Hz	50/60
Rated power	W	55
Unit current	A	0.4
Maximum airflow	m³/h	975
Sound pressure level LpA at 3 m	dB(A)	50
Weight	kg	1.6
Transported air temperature (max)	°C	60
Transported air temperature (min)	°C	-25
Ingress protection rating	-	IPX5
Ingress protection rating of the drive	-	IP55
Impeller material	-	Coated steel

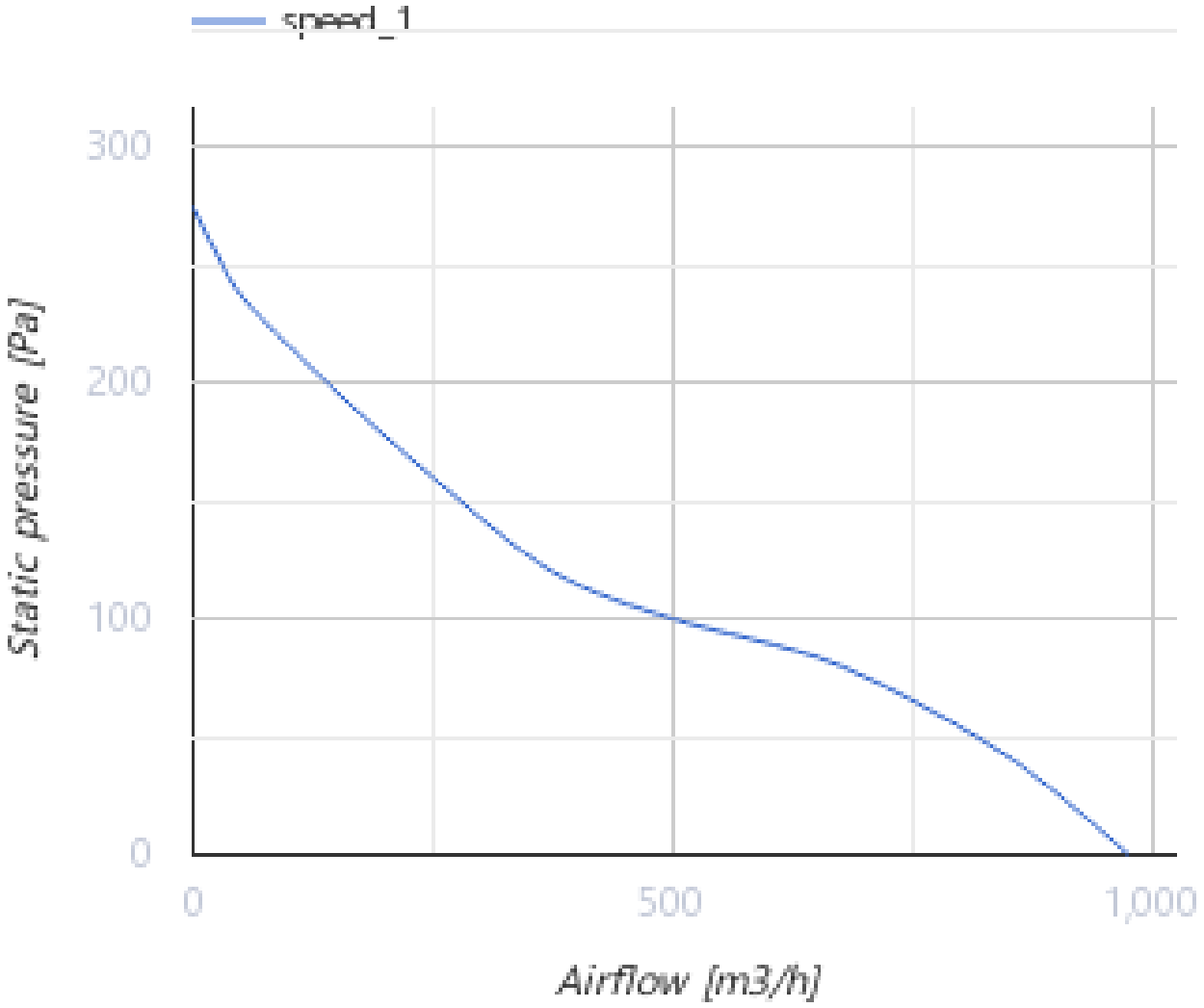

Dimensions

ØD	ØD1	ØD2	Ød	L	L1
210	250	280	7	81	93

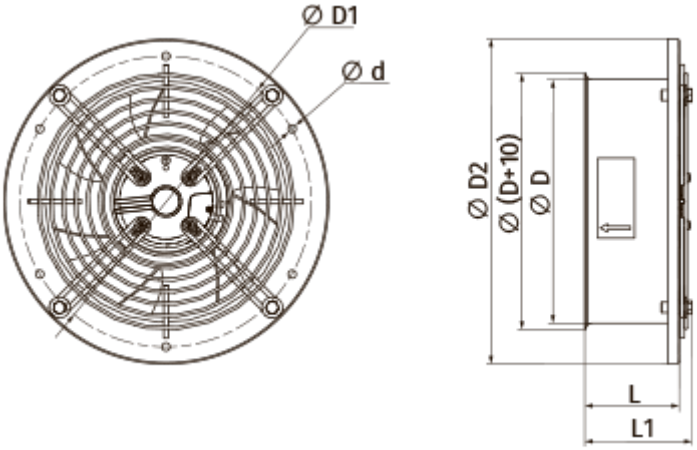

Accessories

Speed controllers for EC motors

Name	Photo	Description
R-1/010		Speed controller for EC motors