OVK 2E 200



Wall-mounted axial fans

- Sound pressure level LpA at 3 m: 48
- Impeller type: Axial
- Casing material: Coated steel
- Installation in any position

	Unit of measurement	OVK 2E 200	
Connected air duct size	mm	200	
Phases	-	1	
Maximum supply voltage	V	240	
Minimum supply voltage	V	220	
Power supply frequency	Hz	50	60
Rated power	W	55	
Unit current	A	0.26	
Maximum airflow	m³/h	860	
Rotation speed at 50hz	-	2300	
Sound pressure level LpA at 3 m	dB(A)	48	
Weight	kg	2.8	
Transported air temperature (max)	°C	60	
Transported air temperature (min)	°C	-30	
Ingress protection rating	-	IP24	
Ingress protection rating of the drive	-	IP54	
Impeller material	-	Coated steel	

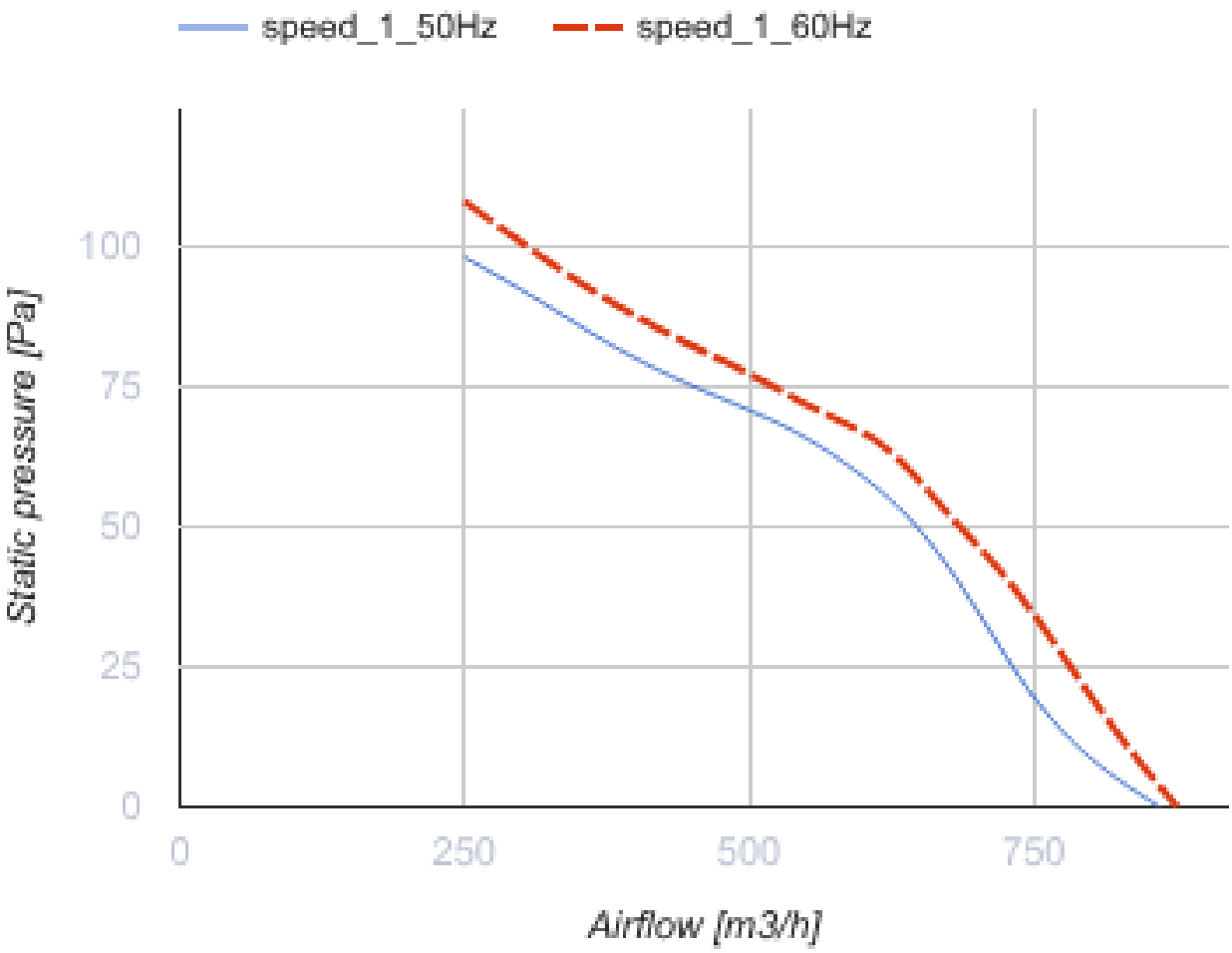
speed_1_50Hz
speed_1_60Hz
Static pressure [Pa]
100
75
50
25
0
0
250
500
750
Airflow [m3/h]

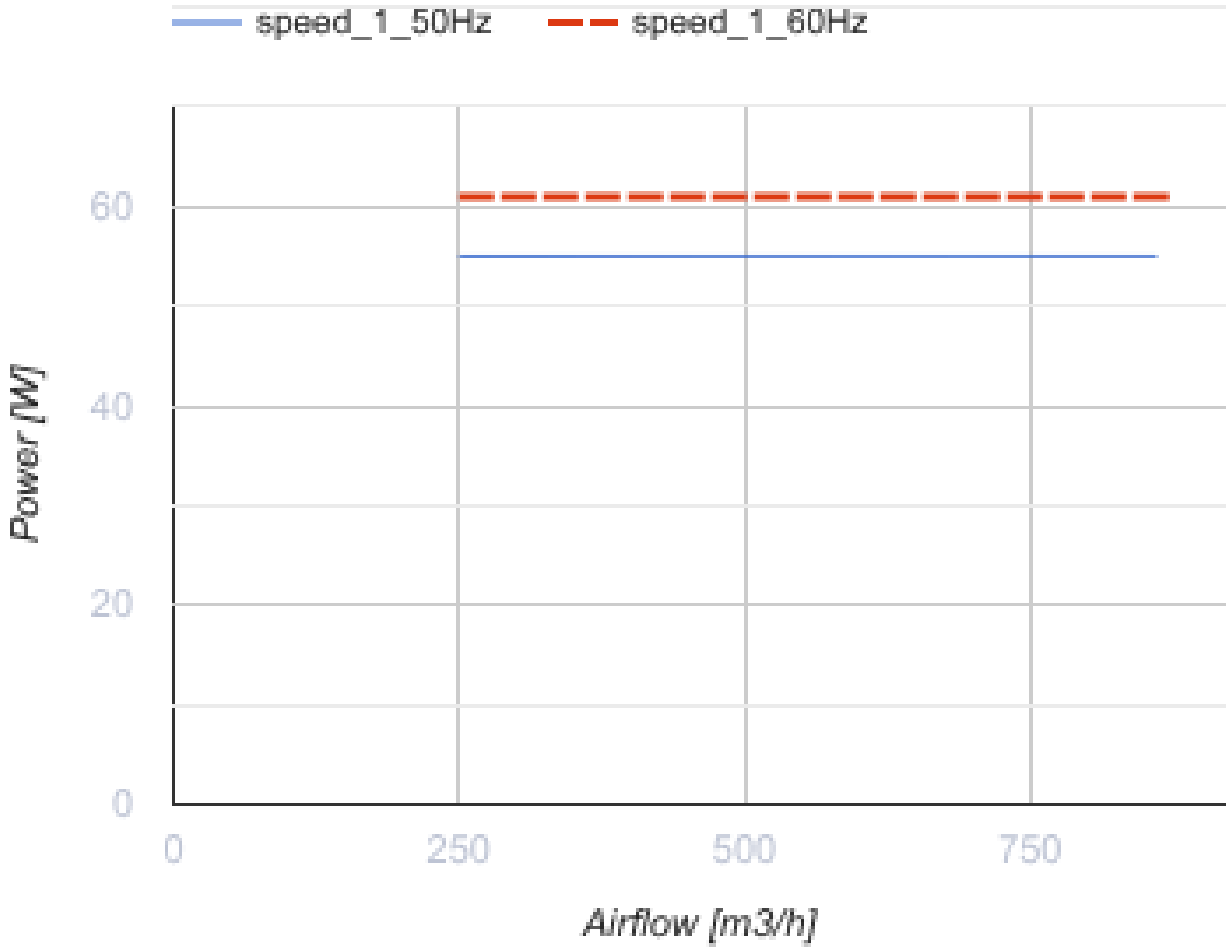

Dimensions

ØD	ØD1	ØD2	Ød	L
210	250	280	7	125

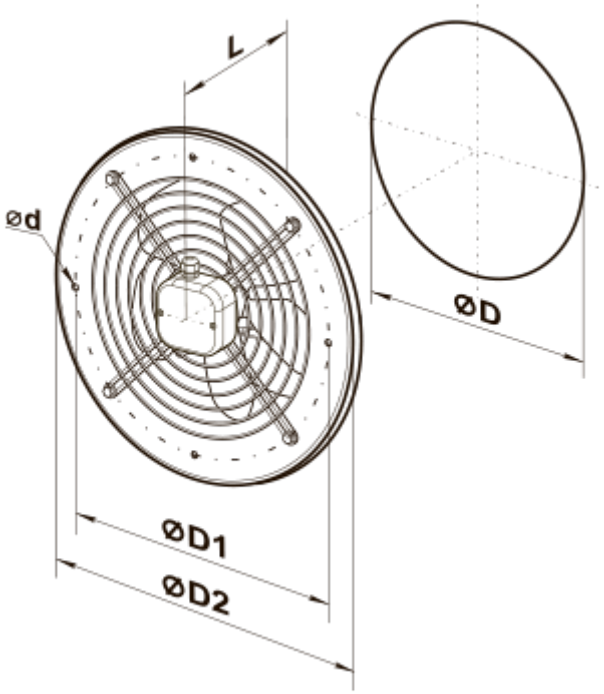
L
ød
ØD
ØD1
ØD2

Ecodesign

Trademark	Vents
Model	OVK 2E 200
Type of drive installed	External MSD or VSD
Type of heat recovery system	None
Nominal external pressure (Pa)	65
Maximum external leakage rates (%)	2.7
Static efficiency (%)	8.3
Declared typology	NRVU UVU
Effective electric power input (kW)	0.06
Sound power level (dB(A))	70