OVK 4D 250



Wall-mounted axial fans

- Sound pressure level LpA at 3 m: 38
- Impeller type: Axial
- Casing material: Coated steel
- Installation in any position

	Unit of measurement	OVK 4D 250	
Connected air duct size	mm	250	
Phases	-	3	
Maximum supply voltage	V	400	
Minimum supply voltage	V	400	
Power supply frequency	Hz	50	60
Rated power	W	60	
Unit current	A	0.17	
Maximum airflow	m³/h	850	
Rotation speed at 50hz	-	1400	
Sound pressure level LpA at 3 m	dB(A)	38	
Weight	kg	3.4	
Transported air temperature (max)	°C	60	
Transported air temperature (min)	°C	-30	
Ingress protection rating	-	IP24	
Ingress protection rating of the drive	-	IP54	
Impeller material	-	Coated steel	

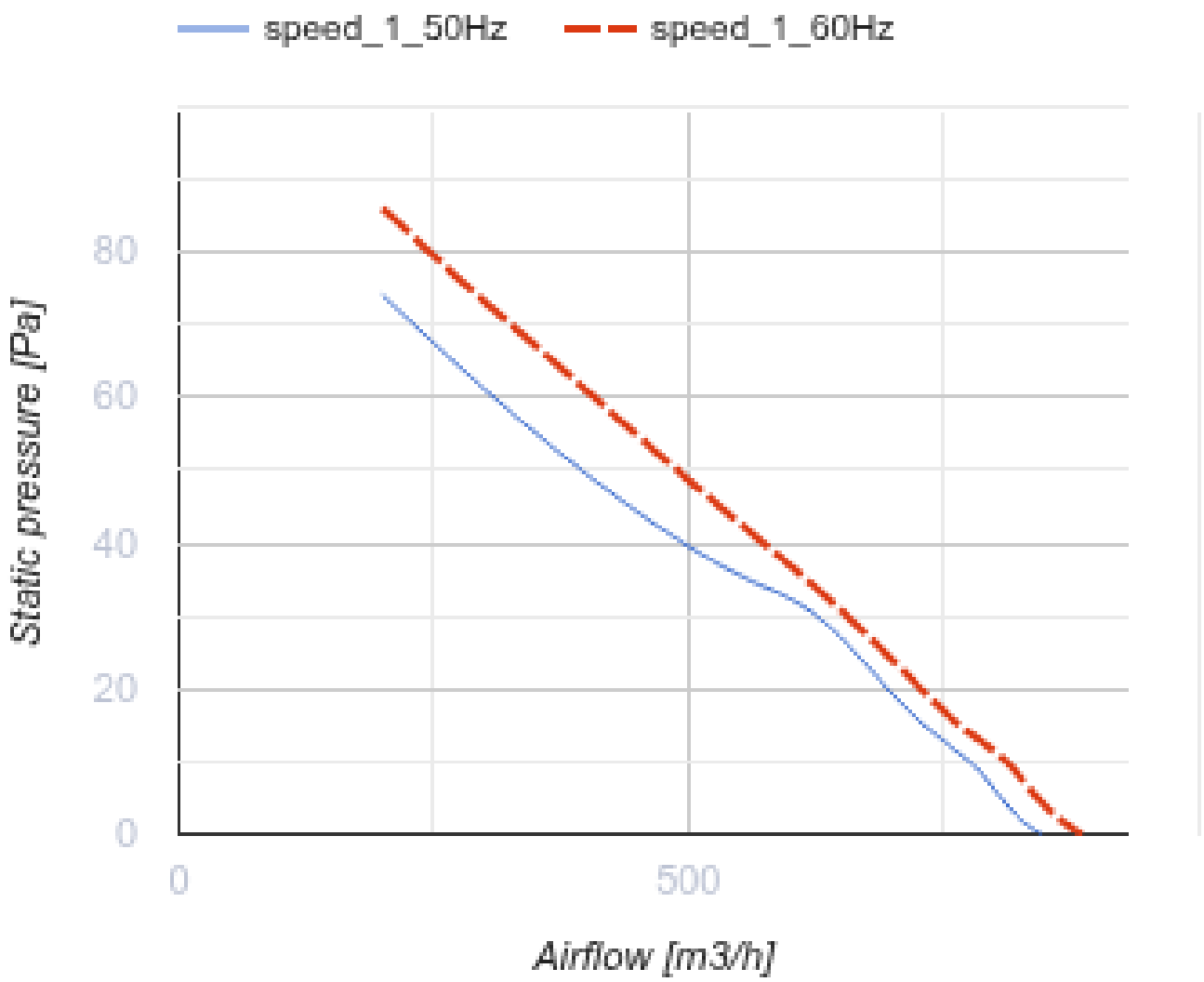
speed_1_50Hz
speed_1_60Hz
Static pressure [Pa]
80
60
40
20
0
0
500
Airflow [m3/h]

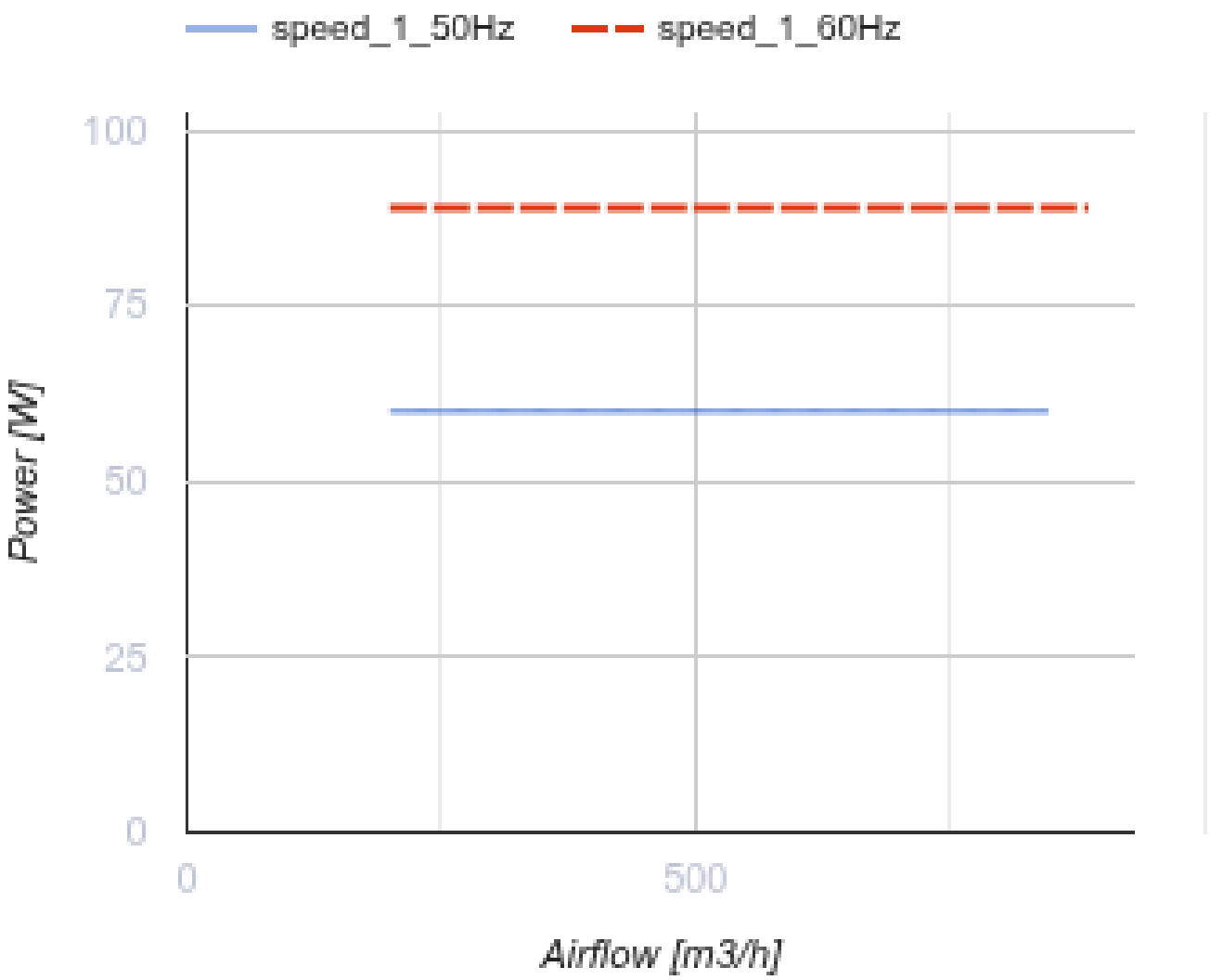

Dimensions

ØD	ØD1	ØD2	Ød	L
260	318	340	7	135

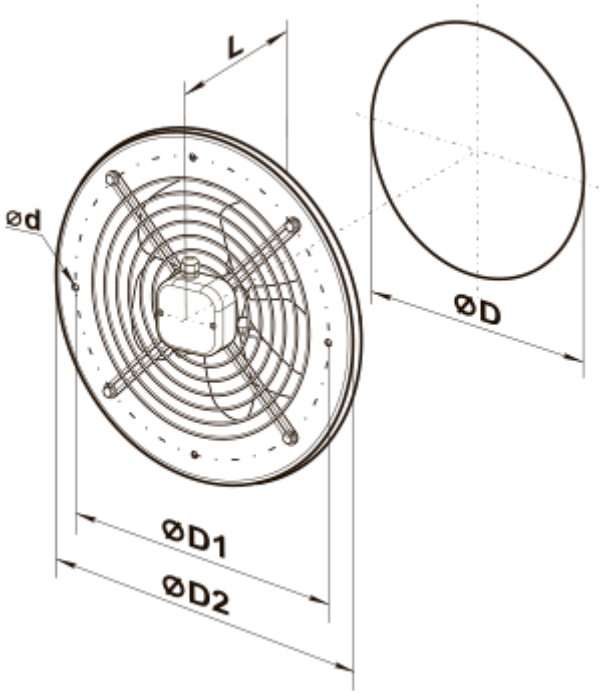
L
ød
ØD
ØD1
ØD2