OVK 4D 350



Wall-mounted axial fans

- Sound pressure level LpA at 3 m: 46
- Impeller type: Axial
- Casing material: Coated steel
- Installation in any position

	Unit of measurement	OVK 4D 350	
Connected air duct size	mm	350	
Phases	-	3	
Maximum supply voltage	V	400	
Minimum supply voltage	V	400	
Power supply frequency	Hz	50	60
Rated power	W	140	
Unit current	A	0.38	
Maximum airflow	m³/h	2350	
Rotation speed at 50hz	-	1419	
Sound pressure level LpA at 3 m	dB(A)	46	
Weight	kg	7.5	
Transported air temperature (max)	°C	60	
Transported air temperature (min)	°C	-30	
Ingress protection rating	-	IP24	
Ingress protection rating of the drive	-	IP54	
Impeller material	-	Coated steel	

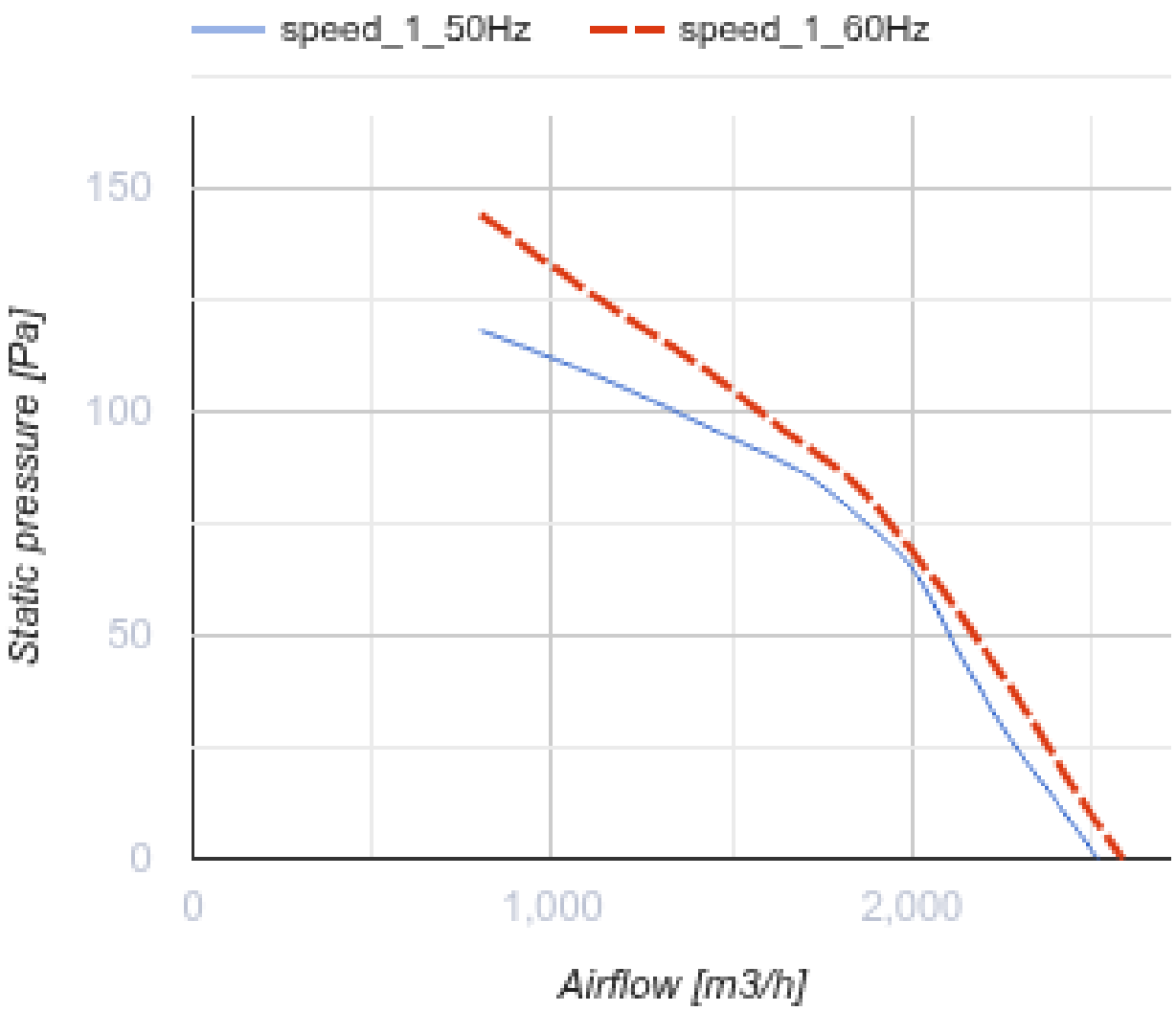
speed_1_50Hz
speed_1_60Hz
150
100
50
0
Static pressure [Pa]
0
1,000
2,000
Airflow [m3/h]

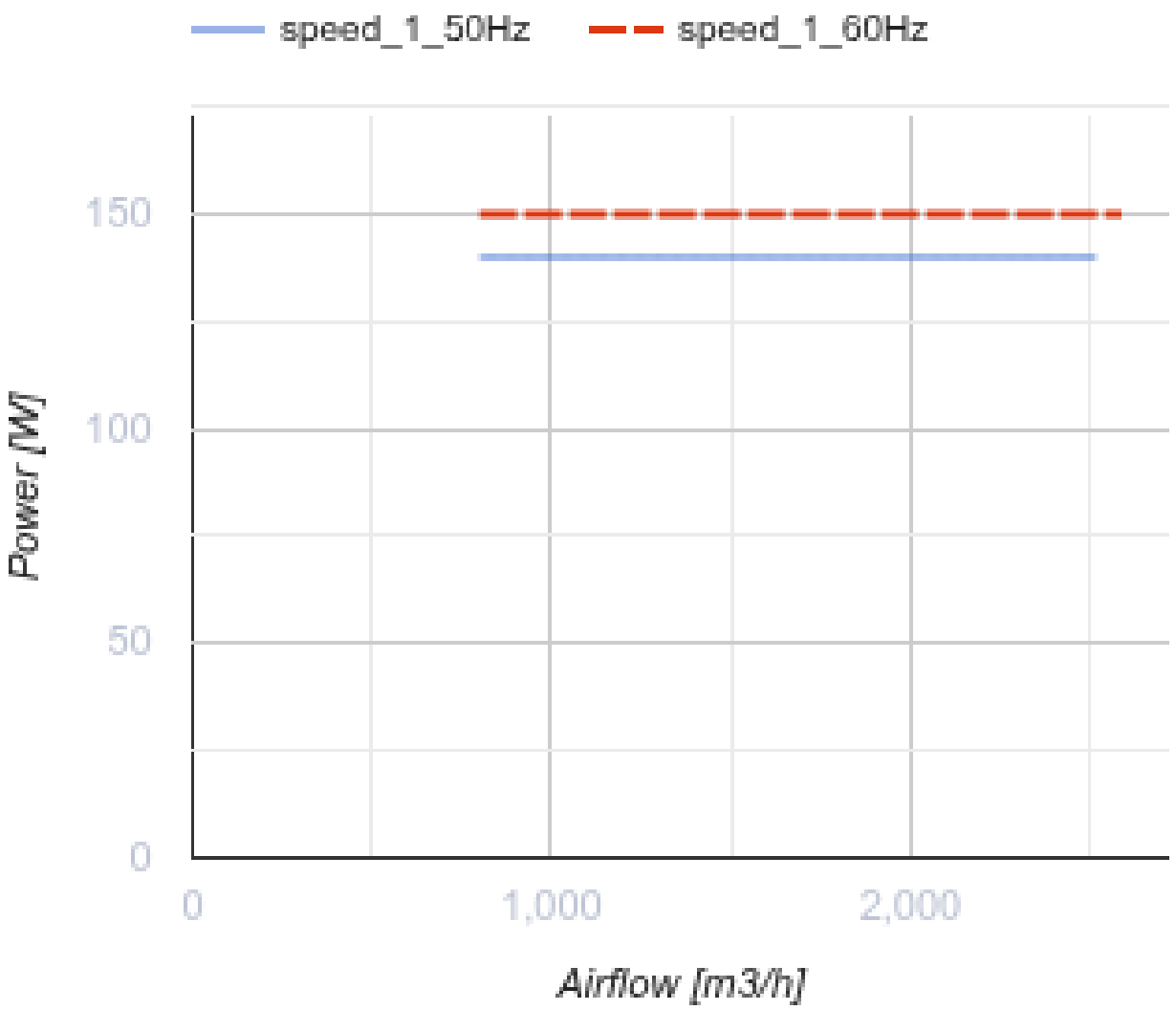

Dimensions

ØD	ØD1	ØD2	Ød	L
374	442	460	9	165

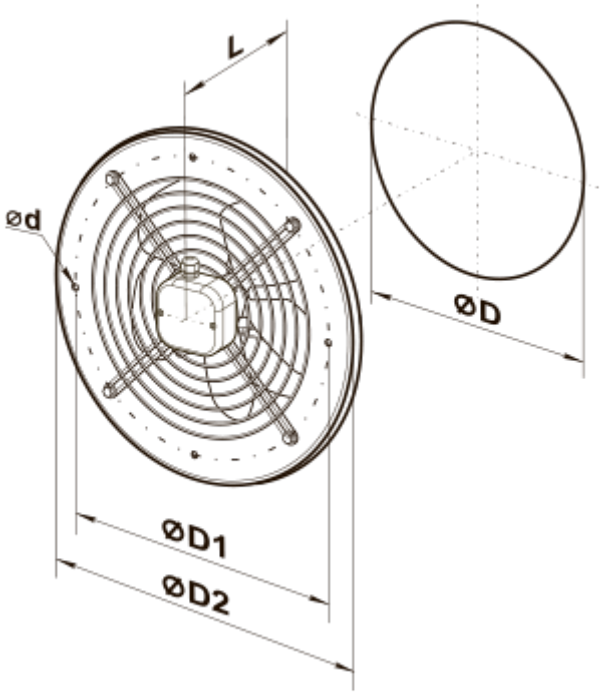
L
ød
ØD
ØD1
ØD2

Ecodesign

Trademark	Vents
Model	OVK 4D 350
Type of drive installed	External MSD or VSD
Type of heat recovery system	None
Nominal external pressure (Pa)	80
Maximum external leakage rates (%)	2.7
Static efficiency (%)	31.7
Declared typology	NRVU UVU
Effective electric power input (kW)	0.129
Sound power level (dB(A))	82