OVK 4D 500



Wall-mounted axial fans

- Sound pressure level LpA at 3 m: 60
- Impeller type: Axial
- Casing material: Coated steel
- Installation in any position

	Unit of measurement	OVK 4D 500
Connected air duct size	mm	500
Phases	-	3
Maximum supply voltage	V	400
Minimum supply voltage	V	400
Power supply frequency	Hz	50
Rated power	W	450
Unit current	A	0.9
Maximum airflow	m³/h	6570
Rotation speed at 50hz	-	1300
Sound pressure level LpA at 3 m	dB(A)	60
Weight	kg	14
Transported air temperature (max)	°C	60
Transported air temperature (min)	°C	-30
Ingress protection rating	-	IP24
Ingress protection rating of the drive	-	IP54
Impeller material	-	Coated steel

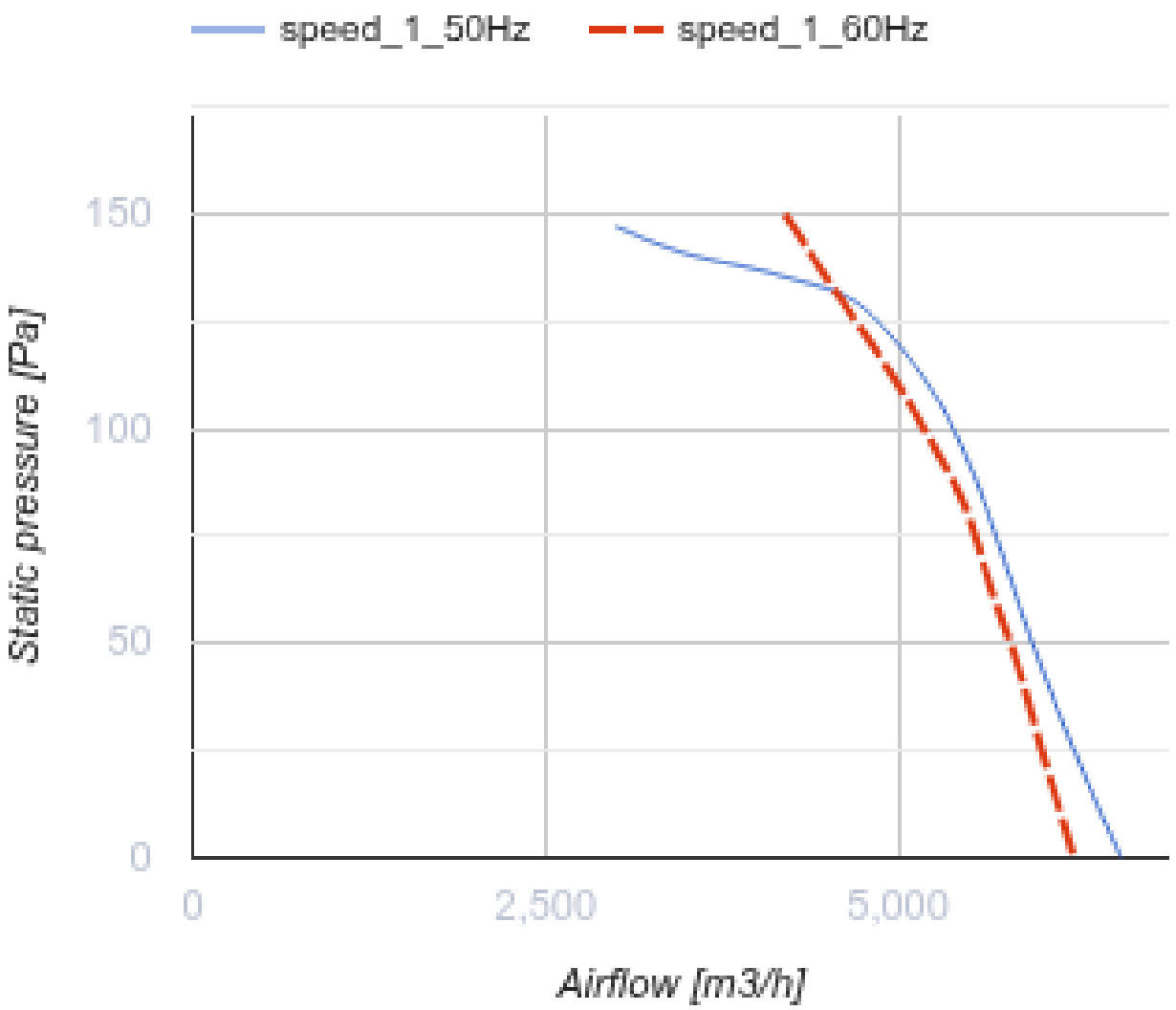
speed_1_50Hz
speed_1_60Hz
150
100
50
0
Static pressure [Pa]
0
2,500
5,000
Airflow [m3/h]

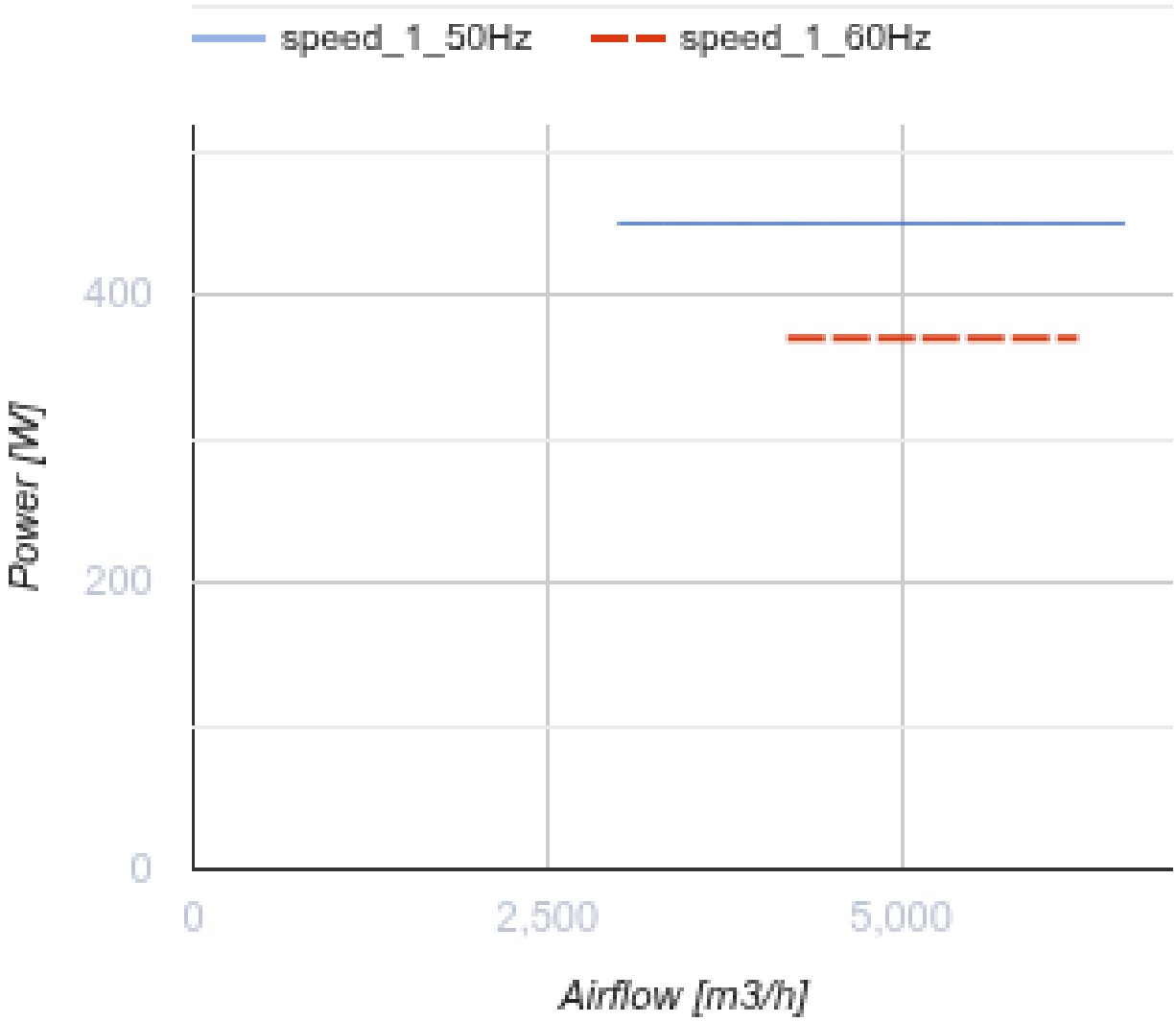

Dimensions

ØD	ØD1	ØD2	Ød	L
520	590	655	11	250

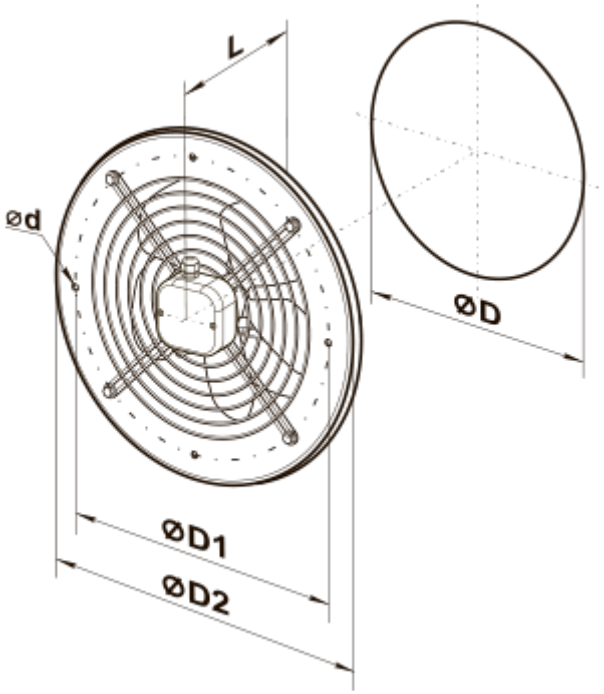
L
ød
ØD
ØD1
ØD2

Ecodesign

Trademark	Vents
Model	OVK 4D 500
Type of drive installed	External MSD or VSD
Type of heat recovery system	None
Nominal external pressure (Pa)	120
Maximum external leakage rates (%)	2.7
Static efficiency (%)	35.5
Declared typology	NRVU UVU
Effective electric power input (kW)	0.478
Sound power level (dB(A))	92