OVK 4E 350



Wall-mounted axial fans

- Sound pressure level LpA at 3 m: 46
- Impeller type: Axial
- Casing material: Coated steel
- Installation in any position

	Unit of measurement	OVK 4E 350	
Connected air duct size	mm	350	
Phases	-	1	
Maximum supply voltage	V	240	
Minimum supply voltage	V	220	
Power supply frequency	Hz	50	60
Rated power	W	140	
Unit current	A	0.65	
Maximum airflow	m³/h	2500	
Rotation speed at 50hz	-	1380	
Sound pressure level LpA at 3 m	dB(A)	46	
Weight	kg	7.5	
Transported air temperature (max)	°C	60	
Transported air temperature (min)	°C	-30	
Ingress protection rating	-	IP24	
Ingress protection rating of the drive	-	IP54	
Impeller material	-	Coated steel	

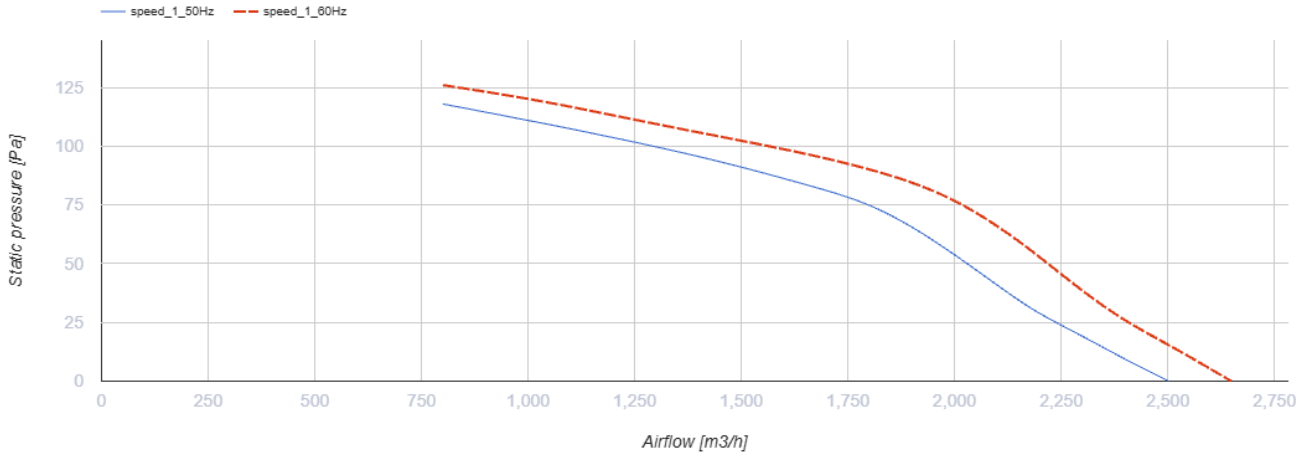

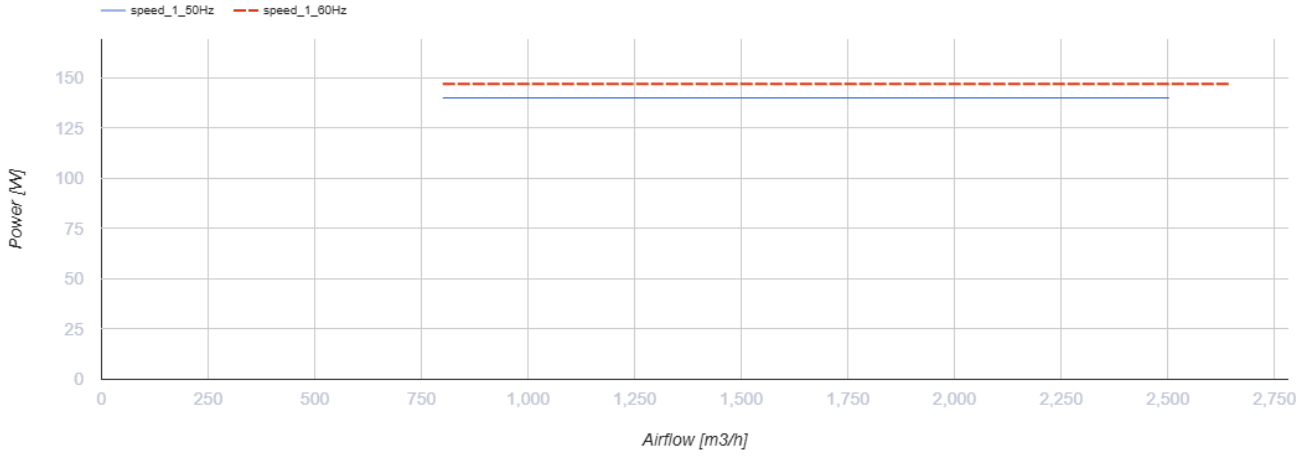

Dimensions

ØD	ØD1	ØD2	Ød	L
374	442	460	9	165

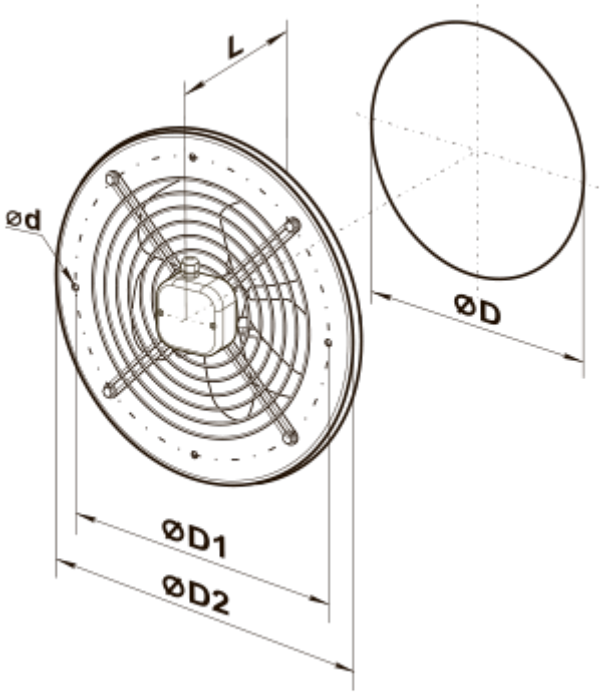
L
ød
ØD
ØD1
ØD2

Ecodesign

Trademark	Vents
Model	OVK 4E 350
Type of drive installed	External MSD or VSD
Type of heat recovery system	None
Nominal external pressure (Pa)	80
Maximum external leakage rates (%)	2.7
Static efficiency (%)	29.9
Sound power level (dB(A))	82
Effective electric power input (kW)	0.13
Declared typology	NRVU UVU