OVK 4E 450



Wall-mounted axial fans

- Sound pressure level LpA at 3 m: 56
- Impeller type: Axial
- Casing material: Coated steel
- Installation in any position

	Unit of measurement	OVK 4E 450
Connected air duct size	mm	450
Phases	-	1
Minimum supply voltage	V	220
Maximum supply voltage	V	240
Power supply frequency	Hz	50
Rated power	W	250
Unit current	A	1.2
Maximum airflow	m³/h	4680
Rotation speed at 50hz	-	1350
Sound pressure level LpA at 3 m	dB(A)	56
Weight	kg	10
Transported air temperature (max)	°C	60
Transported air temperature (min)	°C	-30
Ingress protection rating	-	IP24
Ingress protection rating of the drive	-	IP54
Impeller material	-	Coated steel

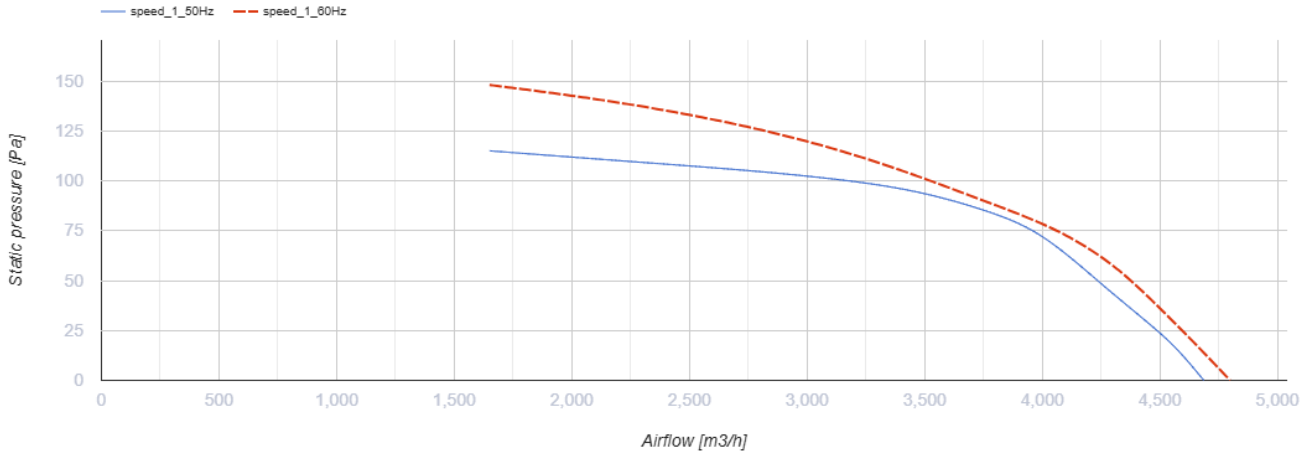

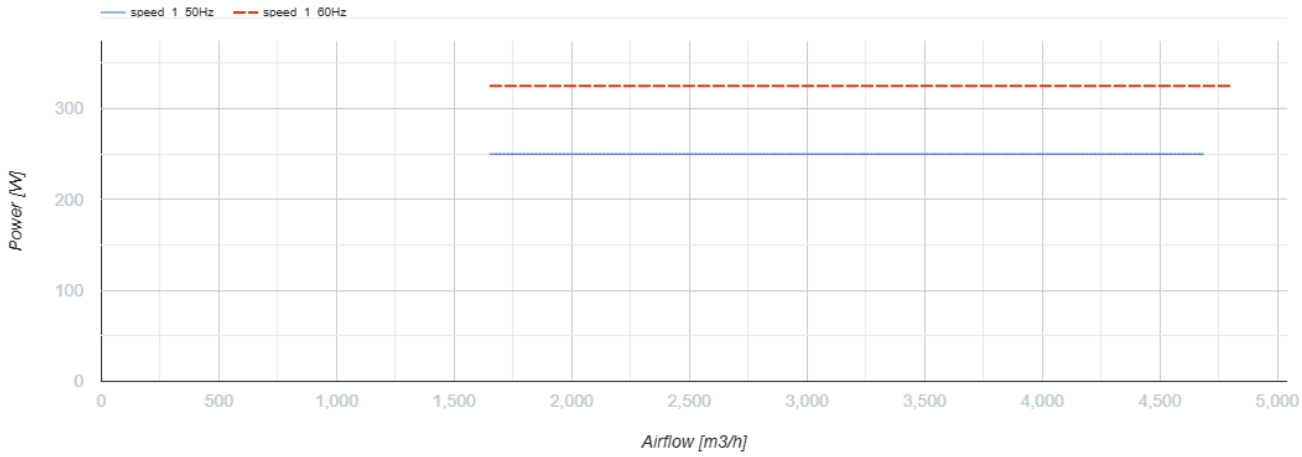

Dimensions

ØD	ØD1	ØD2	Ød	L
465	578	607	11	230

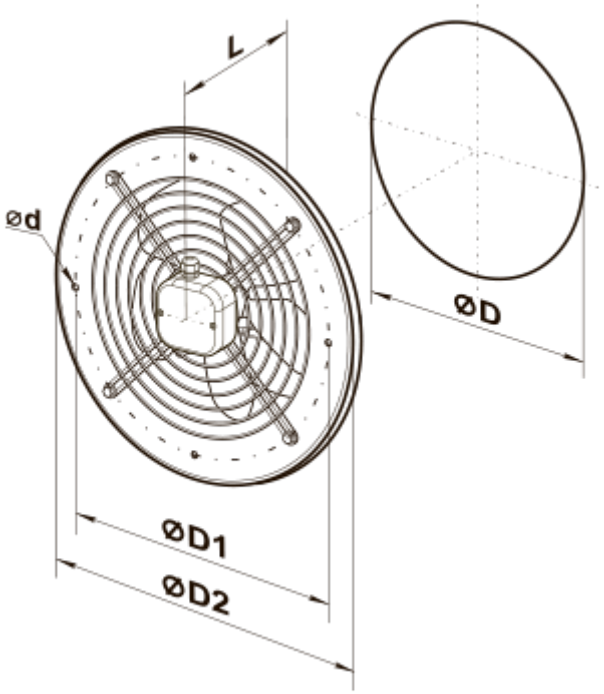
L
ød
ØD
ØD1
ØD2

Ecodesign

Trademark	Vents
Model	OVK 4E 450
Type of drive installed	External MSD or VSD
Type of heat recovery system	None
Nominal external pressure (Pa)	90
Maximum external leakage rates (%)	2.7
Static efficiency (%)	32
Declared typology	NRVU UVU
Effective electric power input (kW)	0.288
Sound power level (dB(A))	84