OVK 4E 630



Wall-mounted axial fans

- Sound pressure level LpA at 3 m: 67
- Impeller type: Axial
- Casing material: Coated steel
- Installation in any position

	Unit of measurement	OVK 4E 630
Connected air duct size	mm	630
Phases	-	1
Maximum supply voltage	V	240
Minimum supply voltage	V	220
Power supply frequency	Hz	50
Rated power	W	750
Unit current	A	3.5
Maximum airflow	m³/h	11900
Rotation speed at 50hz	-	1360
Sound pressure level LpA at 3 m	dB(A)	67
Weight	kg	20
Transported air temperature (max)	°C	60
Transported air temperature (min)	°C	-30
Ingress protection rating	-	IP24
Ingress protection rating of the drive	-	IP54
Impeller material	-	Coated steel

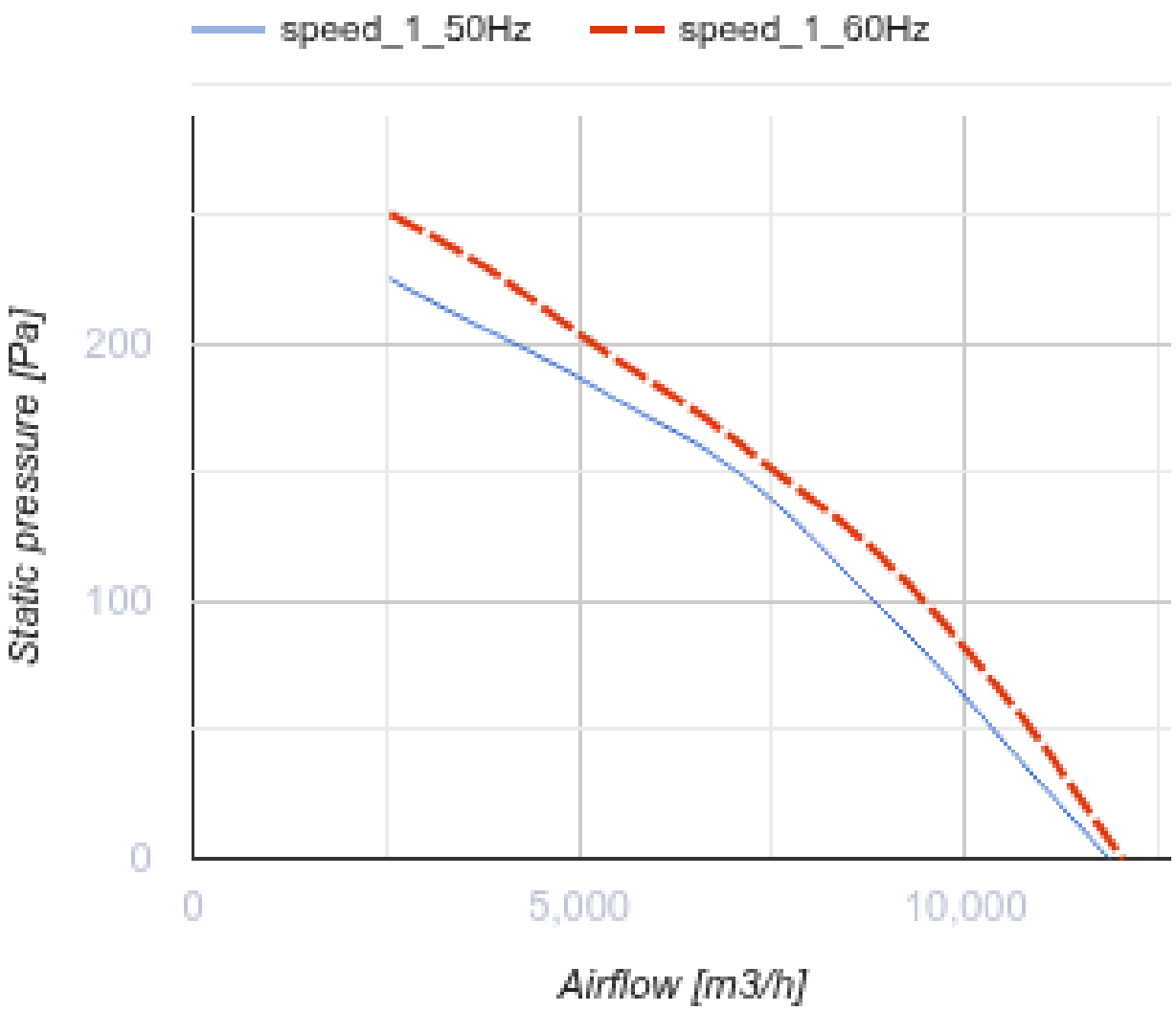
speed_1_50Hz
speed_1_60Hz
Static pressure [Pa]
200
100
0
0
5,000
10,000
Airflow [m3/h]

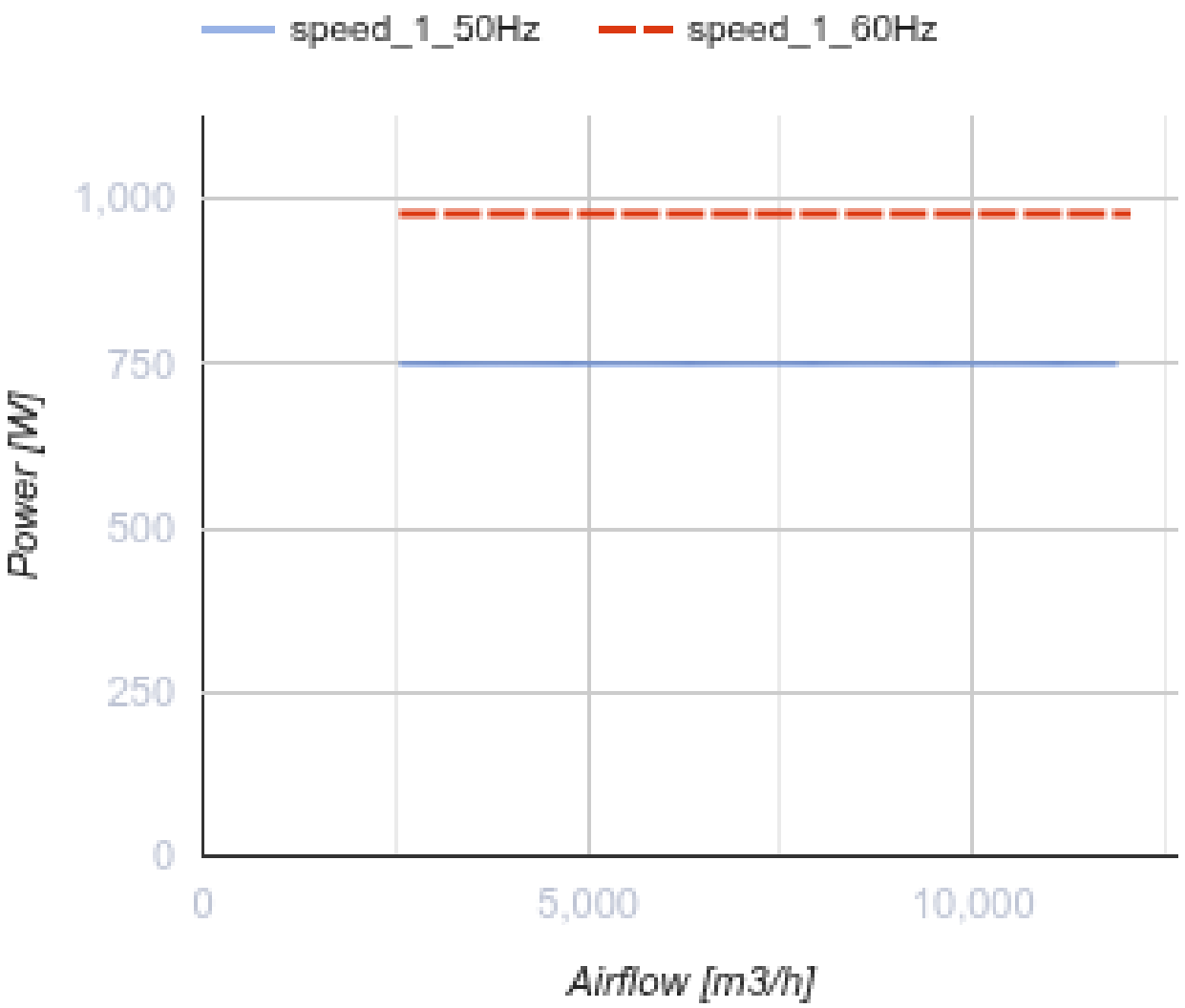

Dimensions

ØD	ØD1	ØD2	Ød	L
650	760	800	11	275

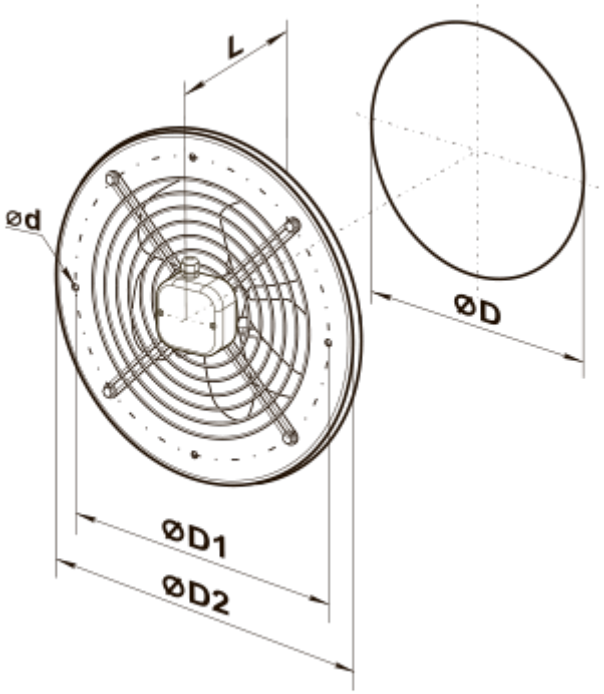
L
ød
ØD
ØD1
ØD2

Ecodesign

Trademark	Vents
Model	OVK 4E 630
Type of drive installed	External MSD or VSD
Type of heat recovery system	None
Nominal external pressure (Pa)	149
Maximum external leakage rates (%)	2.7
Static efficiency (%)	37.5
Effective electric power input (kW)	0.8
Declared typology	NRVU UVU
Sound power level (dB(A))	95