OVK 6D 630 (220V/60Hz)



Wall-mounted axial fans

- Impeller type: Axial
- Casing material: Coated steel
- Installation in any position

	Unit of measurement	OVK 6D 630 (220V/60Hz)
Phases	-	3
Maximum supply voltage	V	400
Minimum supply voltage	V	400
Power supply frequency	Hz	60
Weight	kg	20
Transported air temperature (max)	°C	50
Transported air temperature (min)	°C	-30
Ingress protection rating	-	IP24
Ingress protection rating of the drive	-	IP54
Impeller material	-	Coated steel

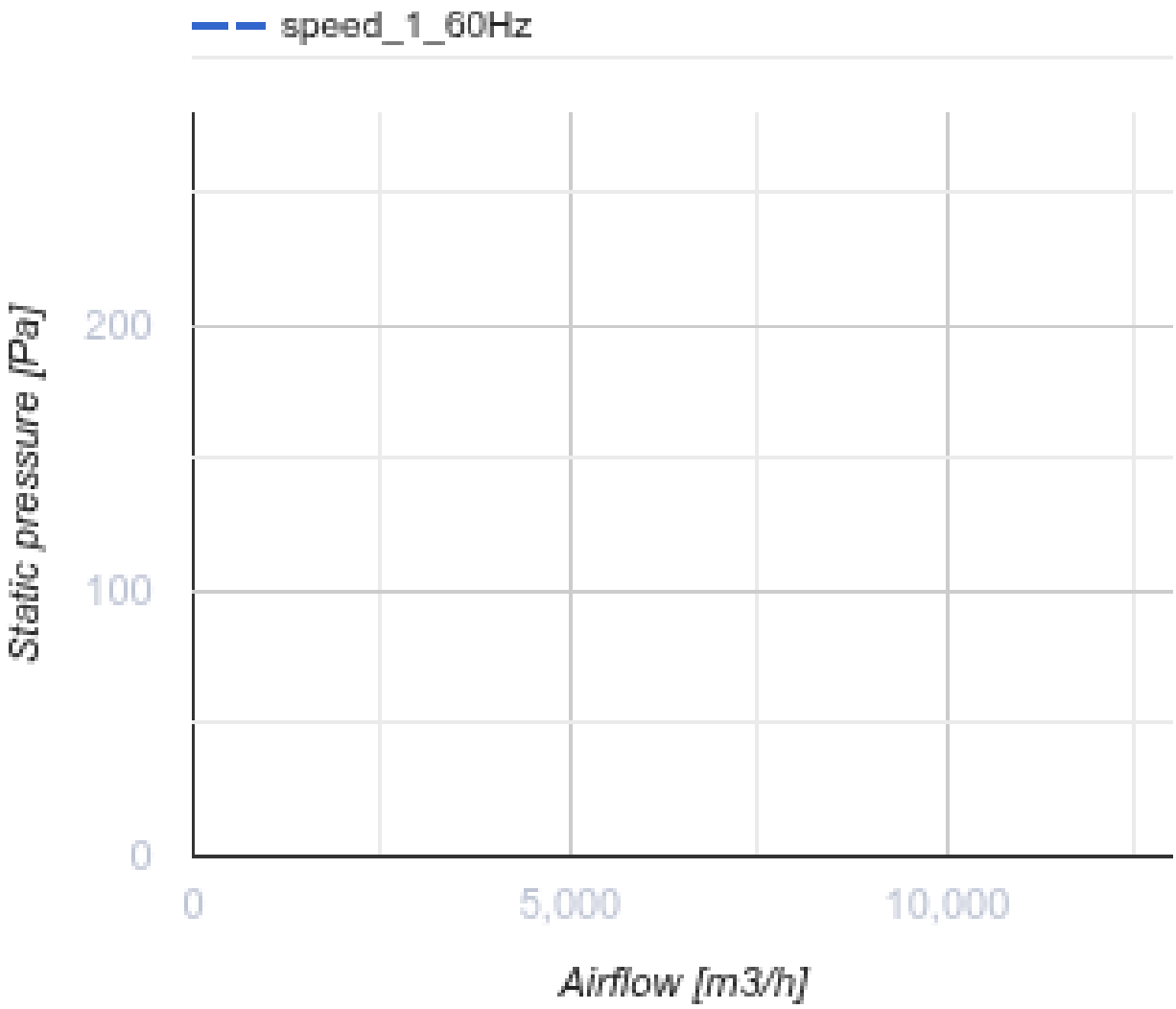
speed_1_60Hz
Static pressure [Pa]
200
100
0
0
5,000
10,000
Airflow [m3/h]

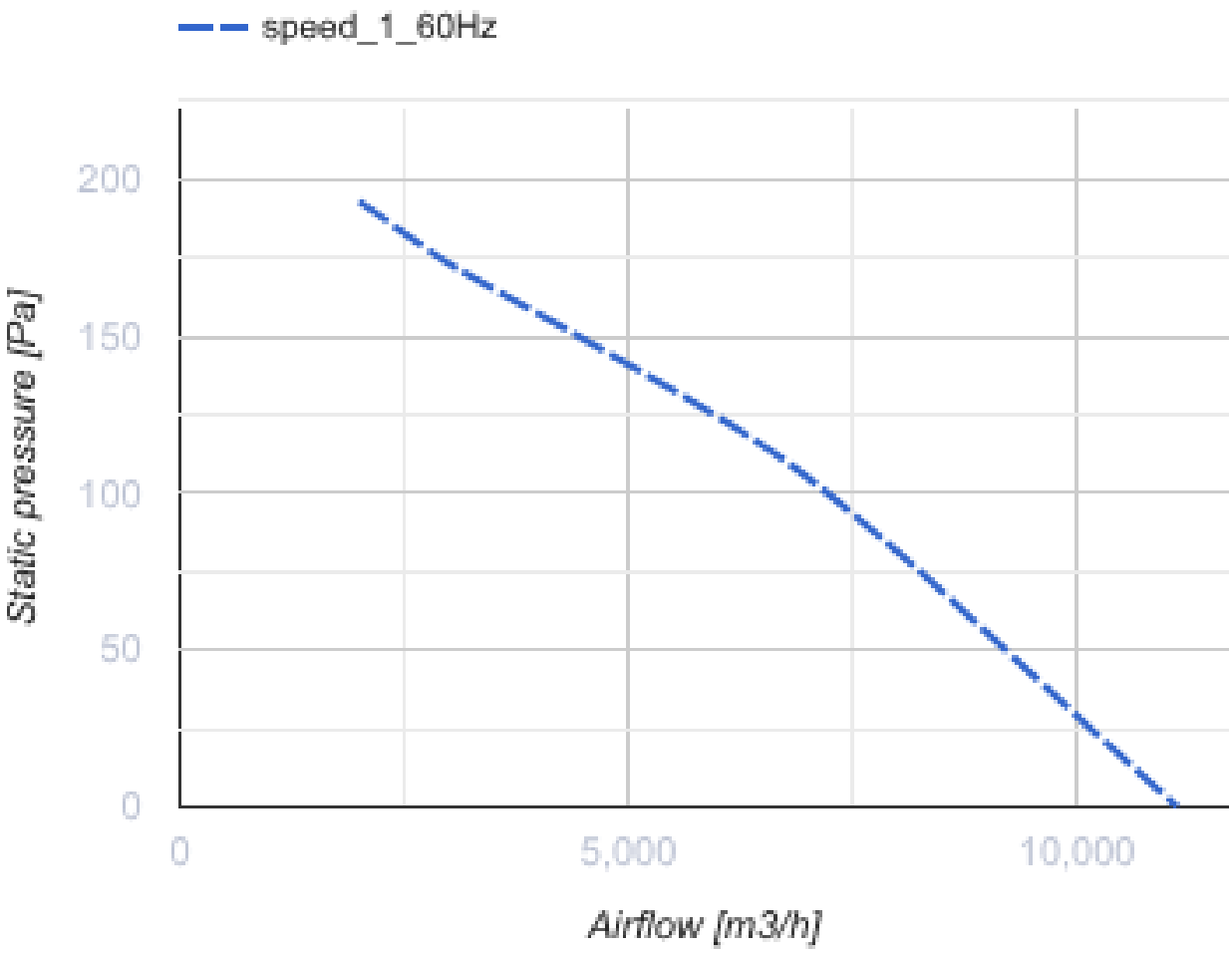
speed_1_60Hz
200
150
100
50
0
Static pressure [Pa]
0
5,000
10,000
Airflow [m3/h]

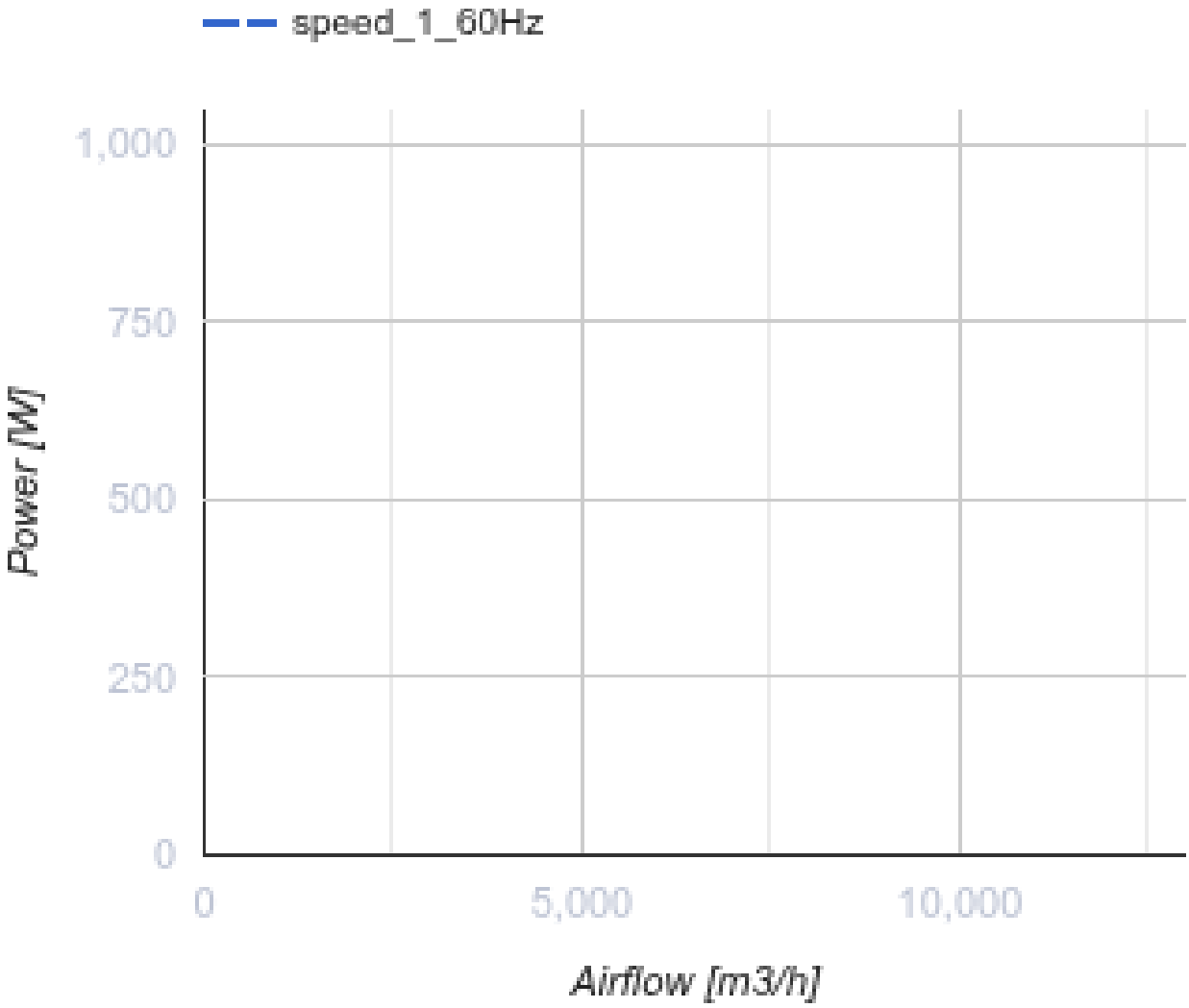

Dimensions

ØD	ØD1	ØD2	Ød	L
650	760	800	11	275

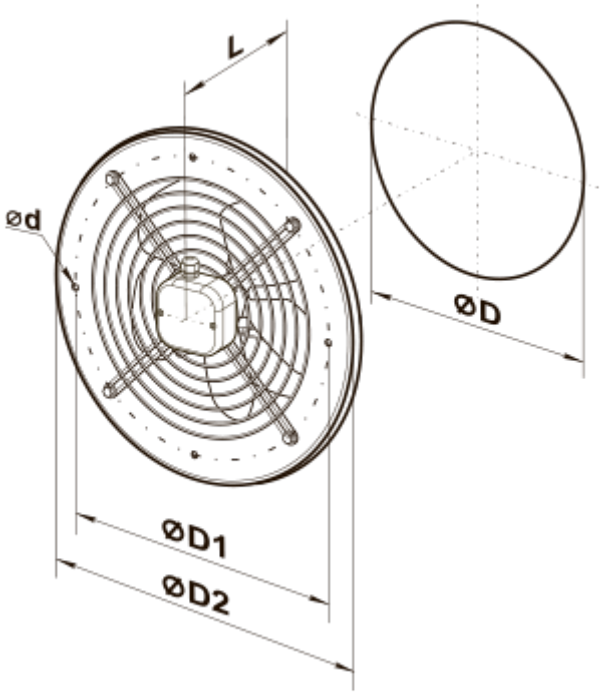
L
ød
ØD
ØD1
ØD2

Ecodesign

Trademark	Vents
Model	OVK 6D 630 (220V/60Hz)
Type of drive installed	External MSD or VSD
Type of heat recovery system	None
Nominal external pressure (Pa)	152
Maximum external leakage rates (%)	2.7
Static efficiency (%)	41.2
Declared typology	NRVU UVU
Effective electric power input (kW)	0.81
Sound power level (dB(A))	98