OVK1 315



Inline axial fans aluminium impellers

- Sound pressure level LpA at 3 m: 42
- Impeller type: Axial
- Casing material: Coated steel
- Installation in any position

	Unit of measurement	OVK1 315	
Connected air duct size	mm	315	
Phases	-	1	
Minimum supply voltage	V	220	
Maximum supply voltage	V	240	
Power supply frequency	Hz	50	60
Rated power	W	110	
Unit current	A	0.75	
Maximum airflow	m^3/h	1700	
Rotation speed at 50hz	-	1300	
Sound pressure level LpA at 3 m	dB(A)	42	
Weight	kg	5.1	
Transported air temperature (max)	°C	40	
Transported air temperature (min)	°C	-30	
Ingress protection rating	-	IP24	
Ingress protection rating of the drive	-	IP44	
Impeller material	-	Aluminium	

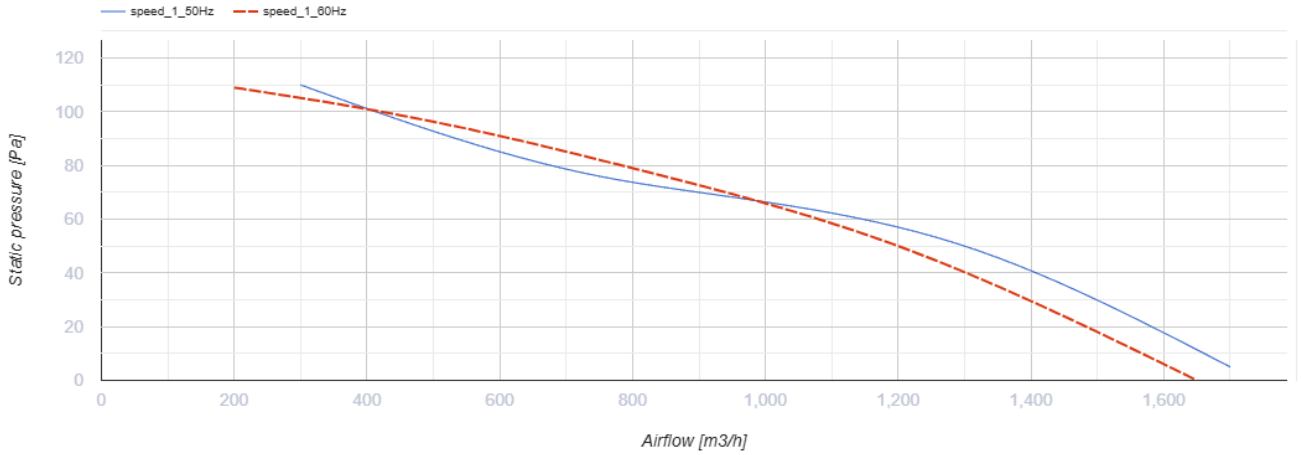

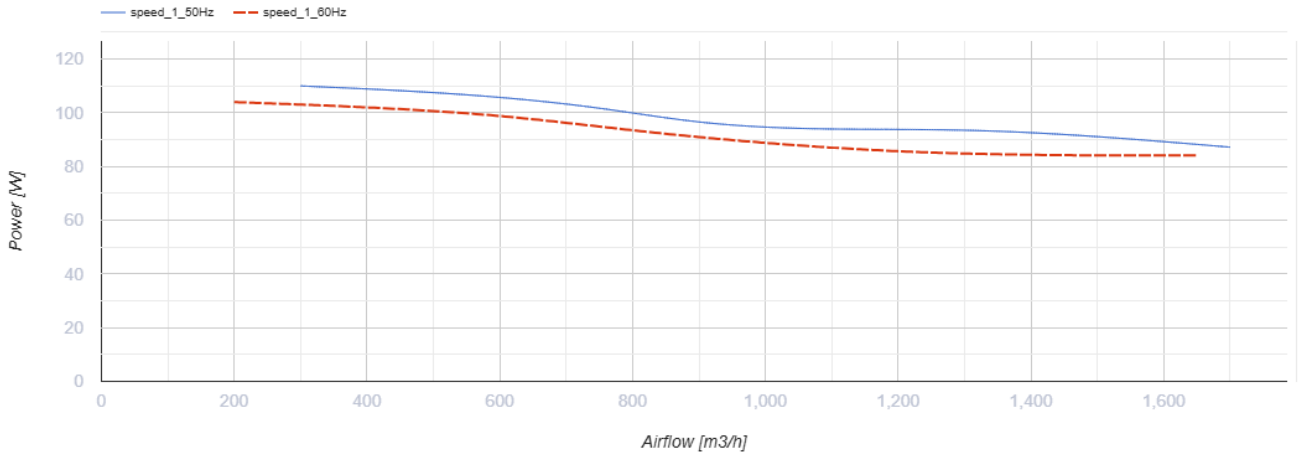

Dimensions

ØD	ØD1	ØD2	Ød	L
312	390	420	9	170

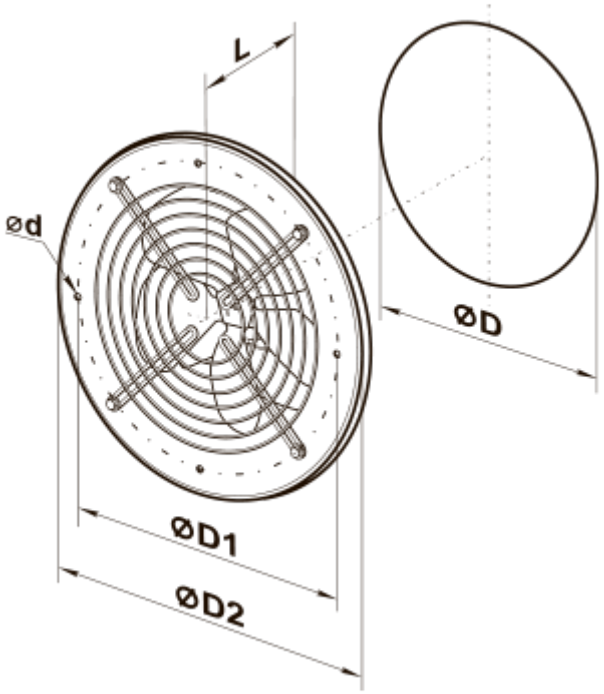
L
ød
ØD
ØD1
ØD2

Ecodesign

Trademark	Vents
Model	OVK1 315
Type of drive installed	External MSD or VSD
Type of heat recovery system	None
Nominal external pressure (Pa)	87
Maximum external leakage rates (%)	2.7
Static efficiency (%)	16.2
Declared typology	NRVU UVU
Effective electric power input (kW)	0.09
Sound power level (dB(A))	74