OVP 2E 250



Inline axial fans

- Sound pressure level LpA at 3 m: 60
- Impeller type: Axial
- Casing material: Coated steel
- Installation in any position

	Unit of measurement	OVP 2E 250
Connected air duct size	mm	250
Phases	-	1
Minimum supply voltage	V	220
Maximum supply voltage	V	240
Power supply frequency	Hz	50/60
Rated power	W	80
Unit current	A	0.4
Maximum airflow	m³/h	1050
Rotation speed at 50hz	-	2400
Sound pressure level LpA at 3 m	dB(A)	60
Weight	kg	4.5
Transported air temperature (max)	°C	60
Transported air temperature (min)	°C	-30
Ingress protection rating	-	IPX4
Ingress protection rating of the drive	-	IP44
Impeller material	-	Coated steel

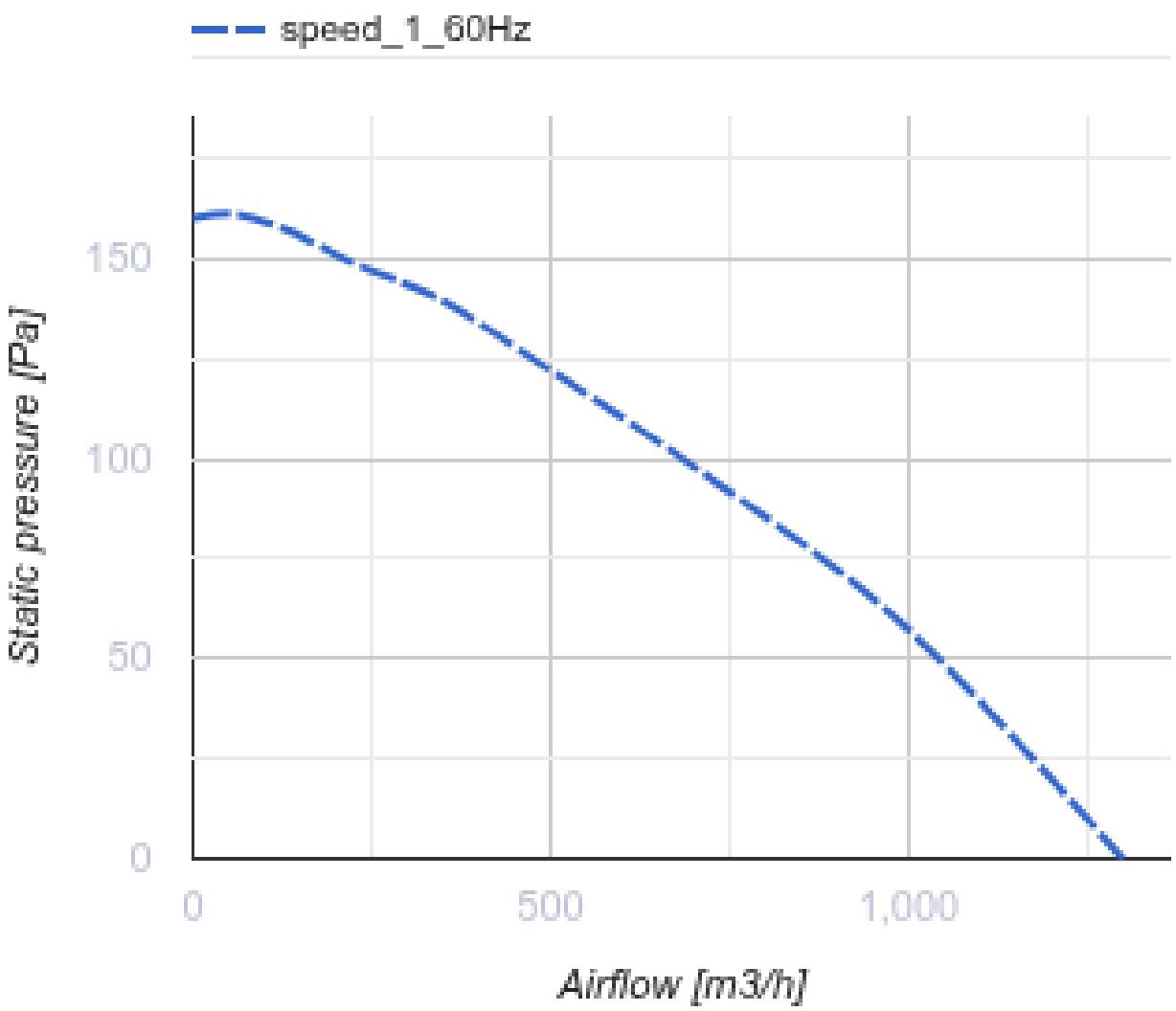
speed_1_60Hz
Static pressure [Pa]
150
100
50
0
0
500
1,000
Airflow [m3/h]

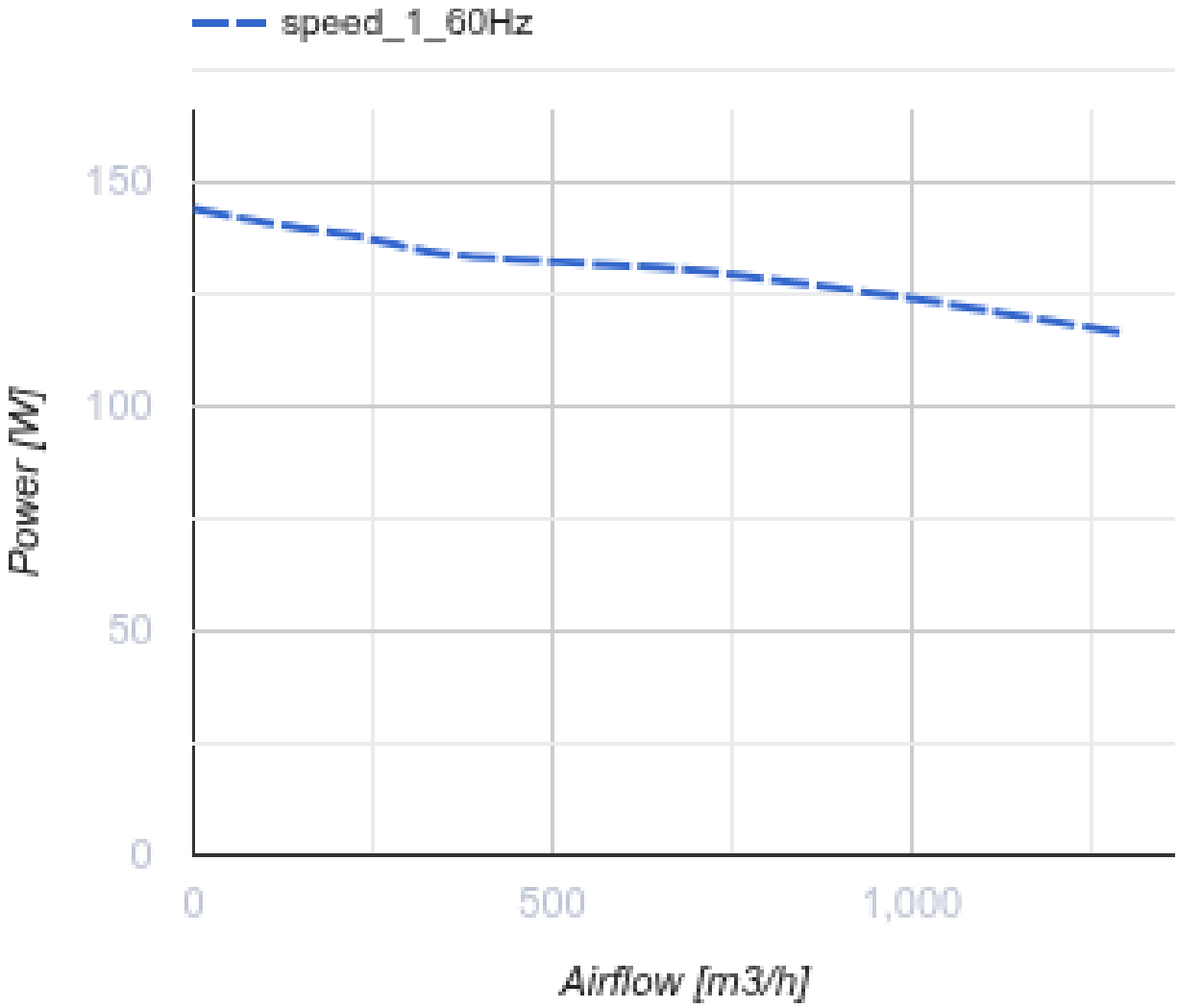

Dimensions

ØD	B	L	H	L1
249	282	250	320	30

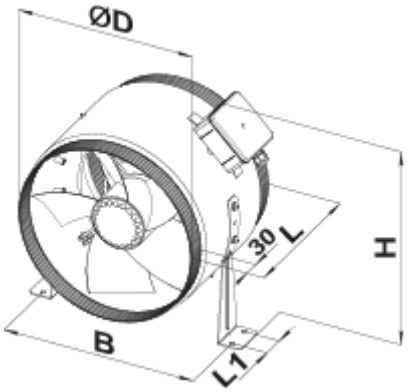

Accessories

Transformer speed controllers

Name	Photo	Description
RSA5E-3,5-T		Speed controllers are applied for air flow control of single phase fans by means of motor step speed control
RSA5E-5,0-T		Speed controllers are applied for air flow control of single phase fans by means of motor step speed control
RSA5E-7,5-T		Speed controllers are applied for air flow control of single phase fans by means of motor step speed control
RSA5E-1,5-T		Speed controllers are applied for air flow control of single phase fans by means of motor step speed control