# OVP 4E 350



Inline axial fans

- Sound pressure level LpA at 3 m: 62
- Impeller type: Axial
- Casing material: Coated steel
- Installation in any position

| | Unit of measurement | OVP 4E 350 |
|---|---|---|
| Connected air duct size | mm | 350 |
| Phases | - | 1 |
| Minimum supply voltage | V | 220 |
| Maximum supply voltage | V | 240 |
| Power supply frequency | Hz | 50/60 |
| Rated power | W | 140 |
| Unit current | A | 0.65 |
| Maximum airflow | m³/h | 2500 |
| Rotation speed at 50hz | - | 1380 |
| Sound pressure level LpA at 3 m | dB(A) | 62 |
| Weight | kg | 8.4 |
| Transported air temperature (max) | °C | 60 |
| Transported air temperature (min) | °C | -30 |
| Ingress protection rating | - | IPX4 |
| Ingress protection rating of the drive | - | IP44 |
| Impeller material | - | Coated steel |

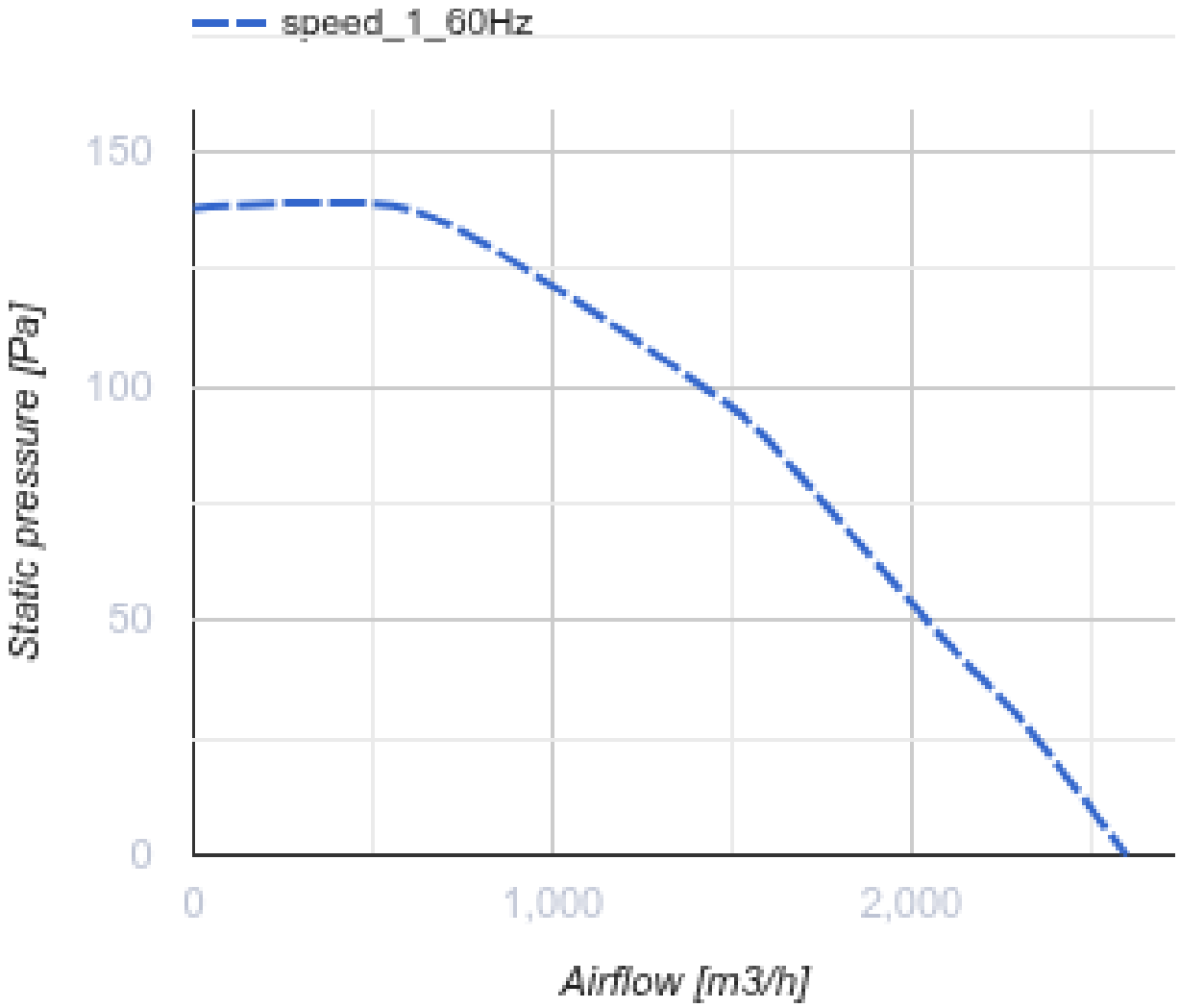
speed_1_60Hz
150
100
50
0
Static pressure [Pa]
0
1,000
2,000
Airflow [m3/h]

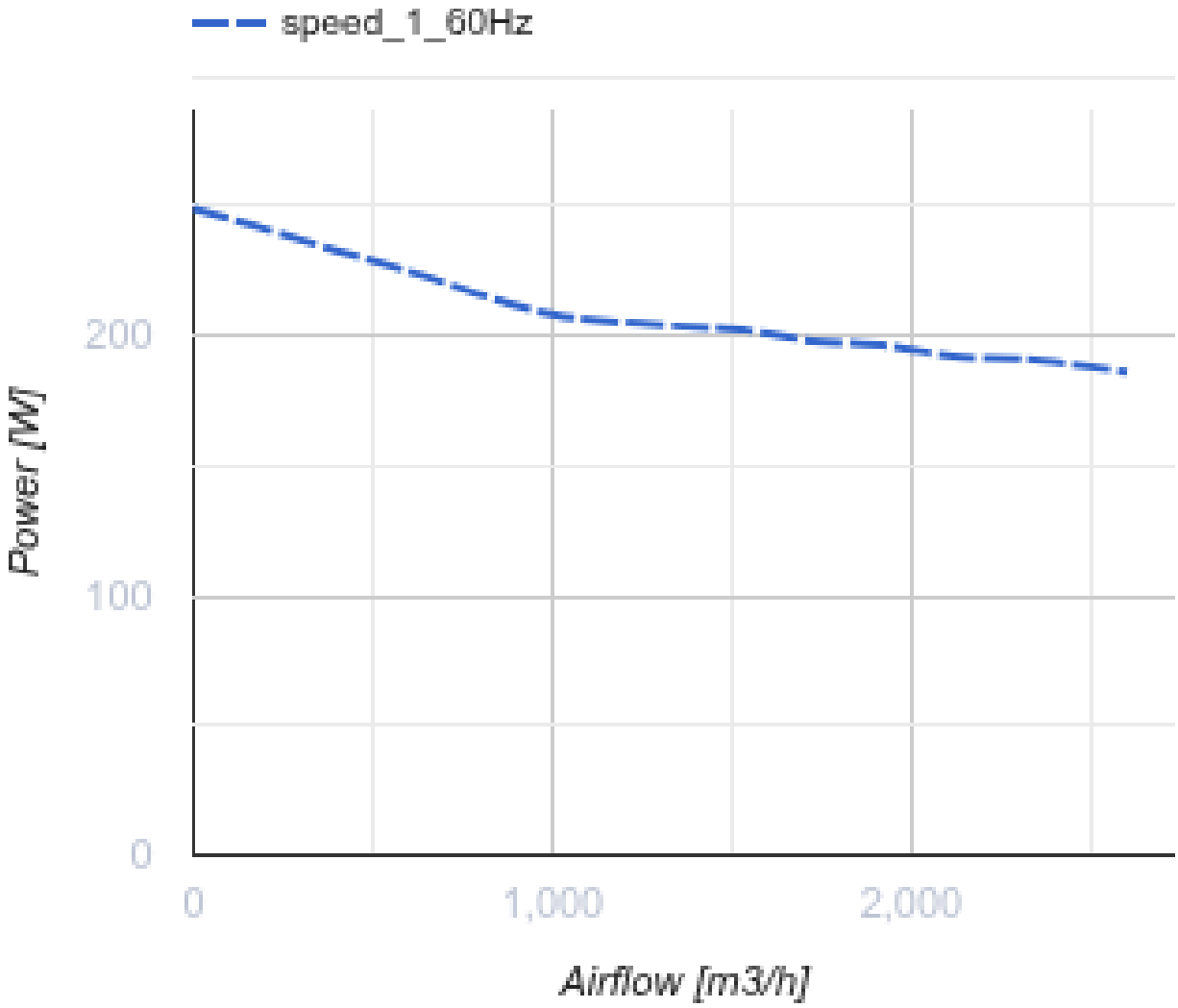


## Dimensions

| ØD | B | L | H | L1 |
|---|---|---|---|---|
| 349 | 378 | 300 | 410 | 40 |

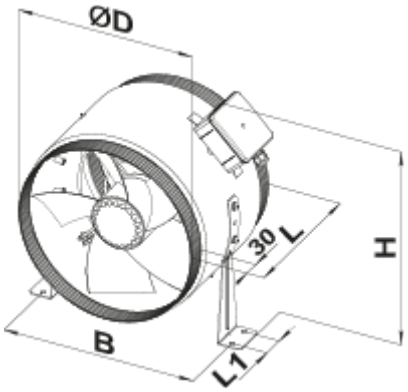

## Accessories

### Transformer speed controllers

| Name | Photo | Description |
|---|---|---|
| RSA5E-3,5-T |  | Speed controllers are applied for air flow control of single phase fans by means of motor step speed control |
| RSA5E-5,0-T |  | Speed controllers are applied for air flow control of single phase fans by means of motor step speed control |
| RSA5E-7,5-T |  | Speed controllers are applied for air flow control of single phase fans by means of motor step speed control |
| RSA5E-1,5-T |  | Speed controllers are applied for air flow control of single phase fans by means of motor step speed control |