PR 150

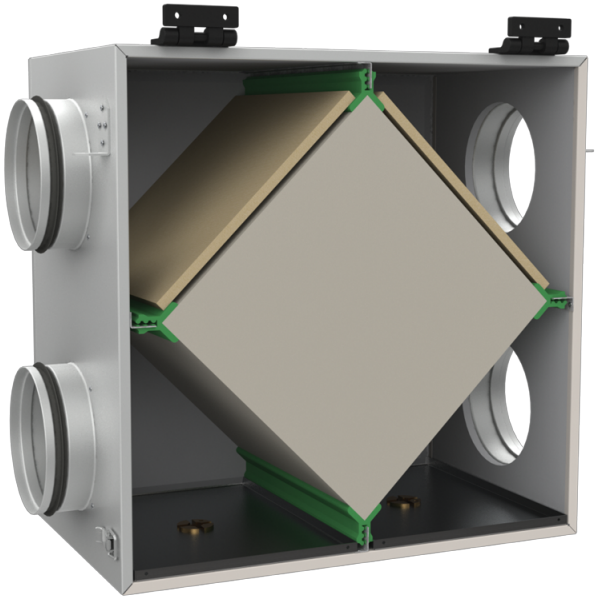

Crossflow plate heat exchanger for round air ducts

- Filter: G4
- Casing material: Galvanized steel

	Unit of measurement	PR 150
Connected air duct size	mm	150
Filter	-	G4

Dimensions

D	B	B1	B2	H	H1	H2	L	L1	L2
149	329	239	165	510	266	122	609	510	540

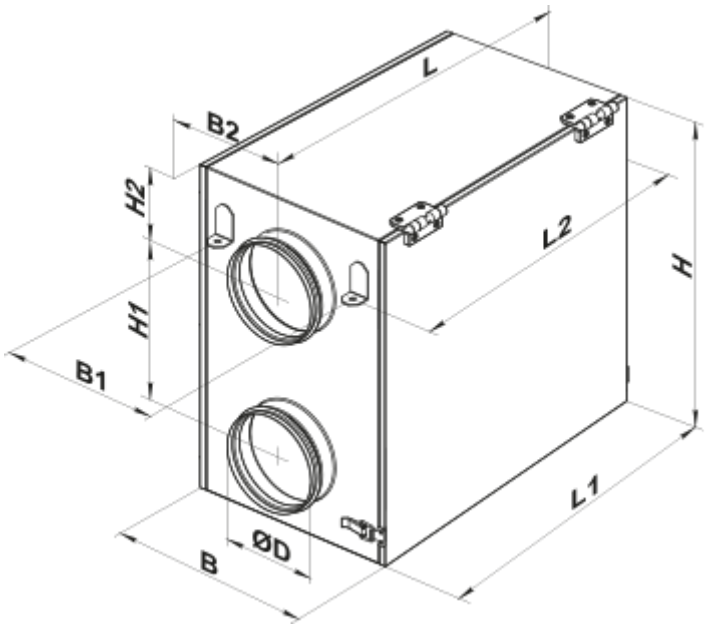
L
B2
H2
H1
B1
L2
H
L1
ØD
B