PR 500x300

Cross-flow plate heat exchangers for rectangular air ducts

• Casing material: Galvanized steel

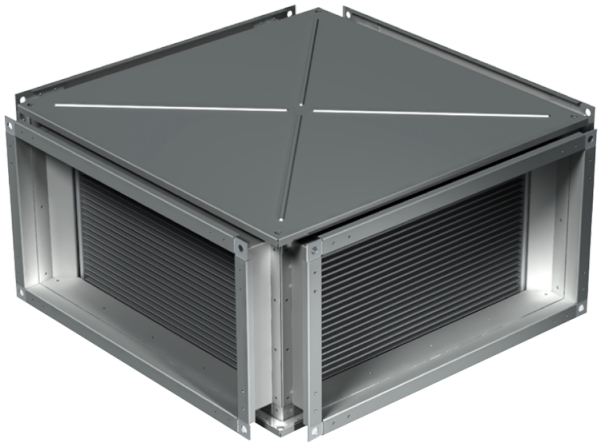

	Unit of measurement	PR 500x300
Weight	kg	24.2

Dimensions

B	B1	B2	H	H1	H2	H3	L
500	520	540	300	320	340	375	630

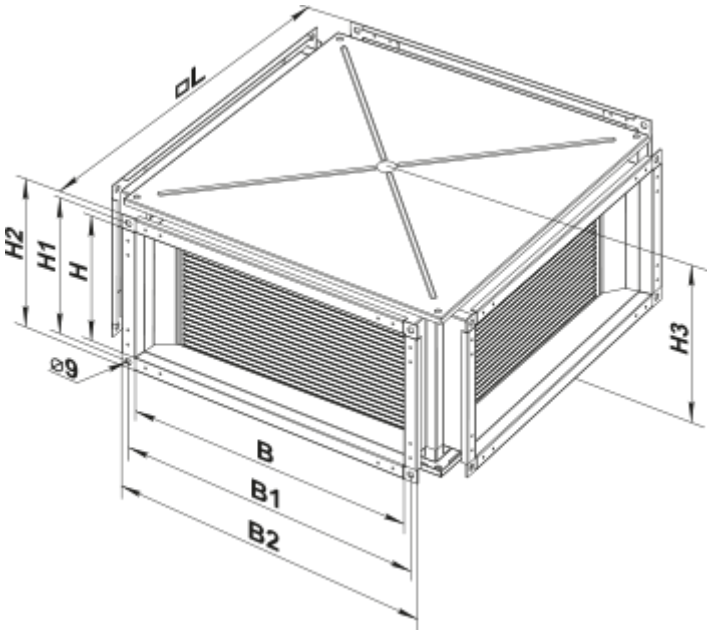
dL
H2
H1
H
⌀9
H3
B
B1
B2