PR 800x500

Cross-flow plate heat exchangers for rectangular air ducts

• Casing material: Galvanized steel

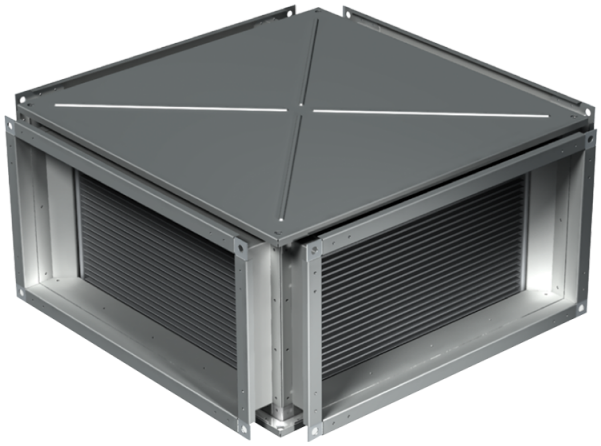

	Unit of measurement	PR 800x500
Weight	kg	61.1

Dimensions

B	B1	B2	H	H1	H2	H3	L
800	820	840	500	520	540	575	930

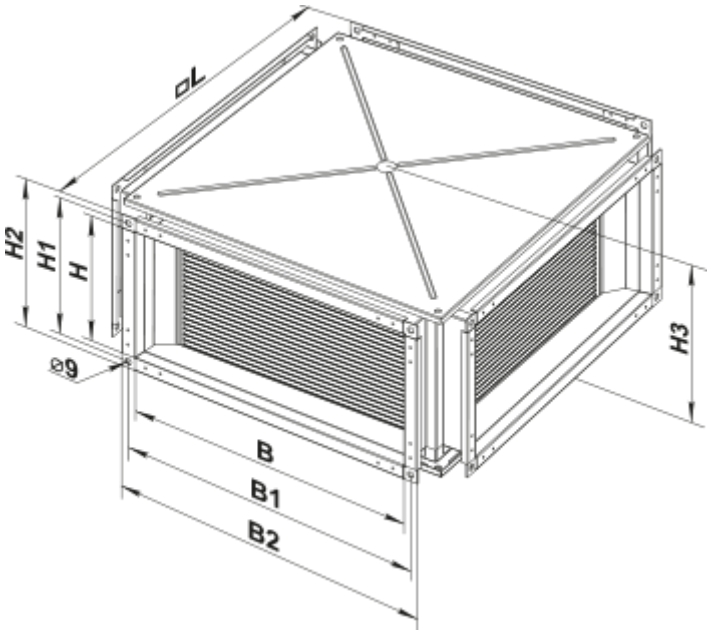
dL
H2
H1
H
⌀9
H3
B
B1
B2