PR 900x500

Cross-flow plate heat exchangers for rectangular air ducts

- Casing material: Galvanized steel

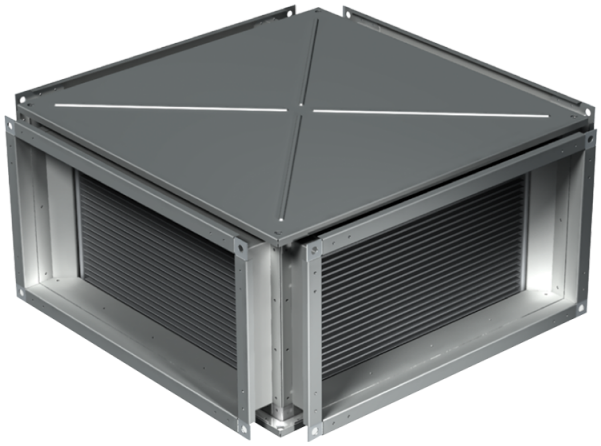

	Unit of measurement	PR 900x500
Weight	kg	78.8

Dimensions

B	B1	B2	H	H1	H2	H3	L
900	920	940	500	520	540	575	1130

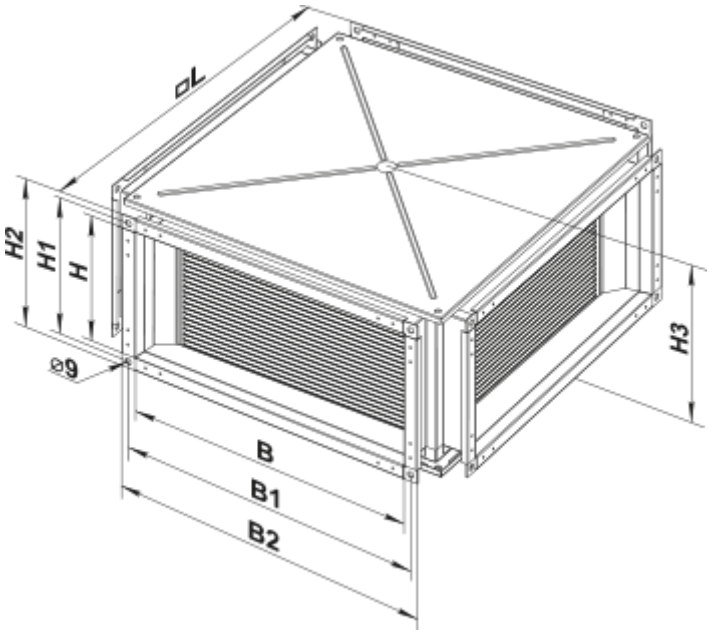
dL
H2
H1
H
⌀9
H3
B
B1
B2