# Quietline 100 K

Extra quiet axial inline fans

- Sound pressure level LpA at 3 m: 25
- Casing material: Plastic
- Backdraft protection: Backdraft damper
- Ball bearing



| | Unit of measurement | Quietline 100 K |
|---|---|---|
| Connected air duct size | mm | 100 |
| Phases | - | 1 |
| Minimum supply voltage | V | 220 |
| Maximum supply voltage | V | 240 |
| Power supply frequency | Hz | 50 |
| Rated power | W | 7.5 |
| Unit current | A | 0.049 |
| Maximum airflow | $m^3/h$ | 100 |
| Rotation speed at 50hz | - | 2100 |
| Sound pressure level LpA at 3 m | dB(A) | 25 |
| Weight | kg | 0.61 |
| Ambient air temperature max | °C | 40 |
| Ambient air temperature min | °C | 1 |
| Ingress protection rating | - | IPX4 |
| Impeller material | - | Plastic |

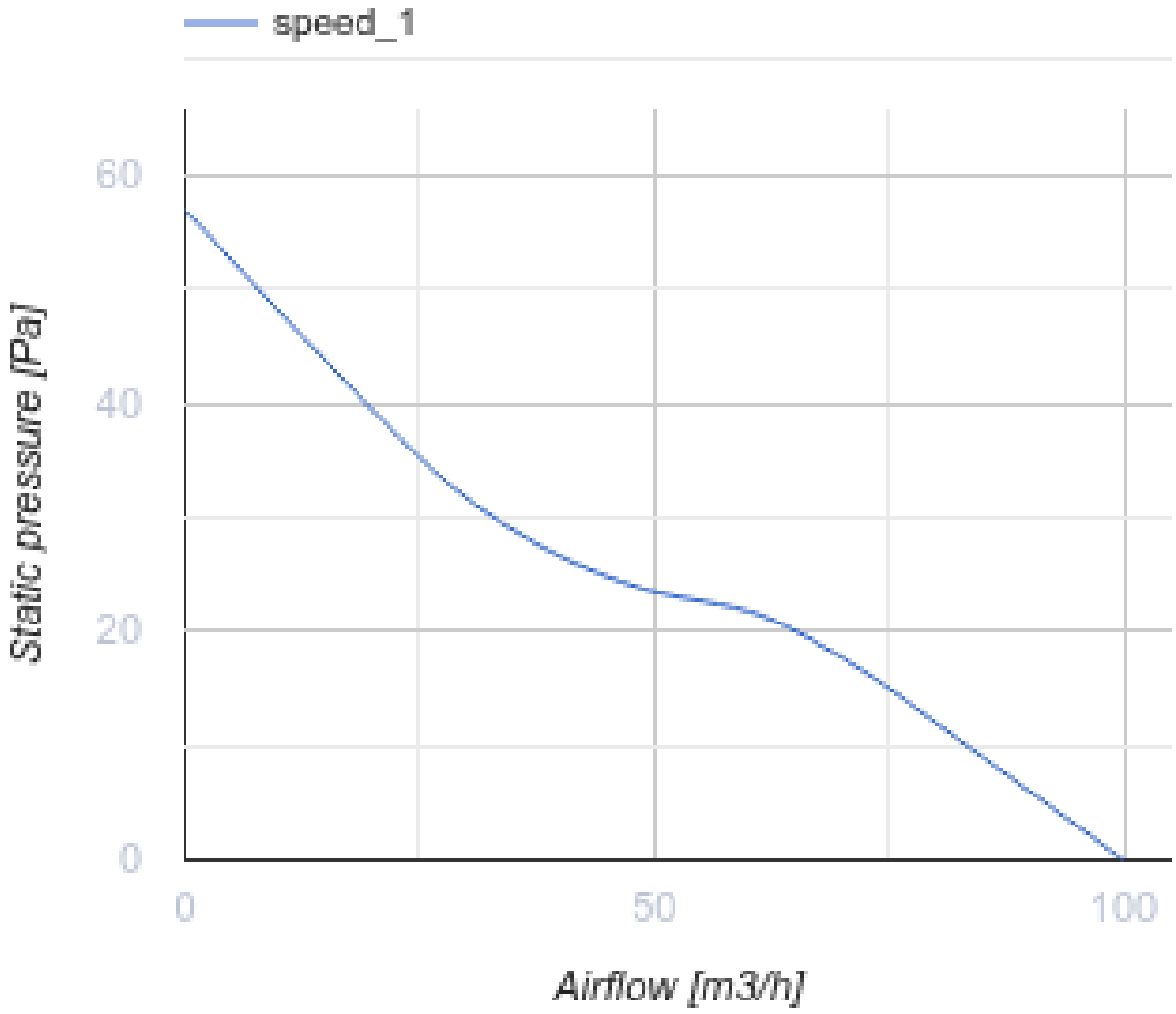


## Dimensions

| L | ØD | k |
|---|---|---|
| 137.5 | 99 | - |

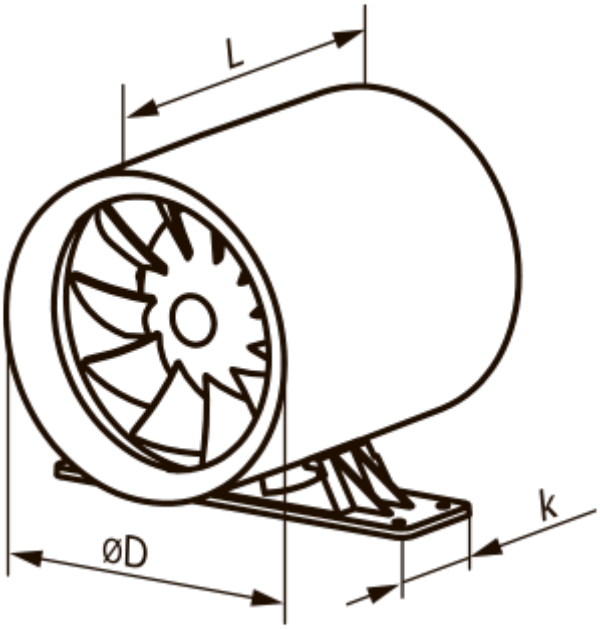


## Accessories

### Plastic

| Name | Photo | Description |
|---|---|---|
| MV 100 V |  | Two-piece plastic grilles with angled louvers |

### Fittings

| Name | Photo | Description |
|---|---|---|
| PVT 050/10 |  | The adhesive PVC tape is an insulation tape made of plasticized PVC base covered with a glue layer |
| PVT 050/30 |  | The adhesive PVC tape is an insulation tape made of plasticized PVC base covered with a glue layer |
| PVT 050/50 |  | The adhesive PVC tape is an insulation tape made of plasticized PVC base covered with a glue layer |
| C 100 |  | The clamps are designed for quick and reliable mounting and connection of various round ventilation system components. Clamps are made of stainless steel band |

### Round

| Name | Photo | Description |
|---|---|---|

| | | |
|---|---|---|
| 1805 |  | Wall mounting |

### Flexible ducts

| Name | Photo | Description |
|---|---|---|
| Polyvent N |  | Flexible uninsulated air duct made of metallized film |

### Window vents

| Name | Photo | Description |
|---|---|---|
| PO 400 |  | Window ventilators for supply ventilation |

### Plastic

| Name | Photo | Description |
|---|---|---|
| MV 102 VK |  | Supply and exhaust hoods |

### Metal

| Name | Photo | Description |
|---|---|---|
| MVM 102 V N |  | Exhaust metal hoods |

## Ecodesign

| Trademark | Vents | | | | | |
|---|---|---|---|---|---|---|
| Model | Quietline 100 K | | | | | |
| Specific energy consumption (SEC) (kWh/(m²/a)) | Cold | | Average | | Warm | |
| | 31.2 | B | 14.8 | E | 5.4 | F |
| Type of ventilation unit | Unidirectional | | | | | |
| Type of drive installed | Single speed | | | | | |
| Type of heat recovery system | None | | | | | |
| Maximum flow rate (m³/h) | 100 | | | | | |
| Electric power input (W) | 7.5 | | | | | |
| Reference flow rate (m³/s) | 0.019 | | | | | |
| Specific power input (SPI) (W/(m³/h)) | 0.075 | | | | | |
| Control typology | Manual control | | | | | |
| Maximum external leakage rates (%) | 2.7 | | | | | |
| Sound power level (dB(A)) | 45 | | | | | |
| Declared typology | RVU UVU | | | | | |
| The annual electricity consumption (AEC) (kWh/a) | Cold | | Average | | Warm | |
| | 94 | | 94 | | 94 | |
| The annual heating saved (AHS) (kWh/a) | Cold | | Average | | Warm | |
| | 3355 | | 1715 | | 776 | |