Quietline 125 T Duo

Extra quiet axial inline fans

- Sound pressure level LpA at 3 m: 32
- Casing material: Plastic
- Backdraft protection: Backdraft damper
- Timer: Turn off timer
- Ball bearing



	Unit of measurement	Quietline 125 T Duo	
Speed	-	1	2
Connected air duct size	mm	125	
Phases	-	1	
Minimum supply voltage	V	220	
Maximum supply voltage	V	240	
Power supply frequency	Hz	50	
Rated power	W	10	13
Unit current	A	0.065	0.085
Maximum airflow	m³/h	145	197
Rotation speed at 50hz	-	1950	2250
Sound pressure level LpA at 3 m	dB(A)	29	32
Weight	kg	0.75	
Ambient air temperature max	°C	40	
Ambient air temperature min	°C	1	
Ingress protection rating	-	IPX4	
Impeller material	-	Plastic	

Dimensions

L	ØD	k
161.5	125	-

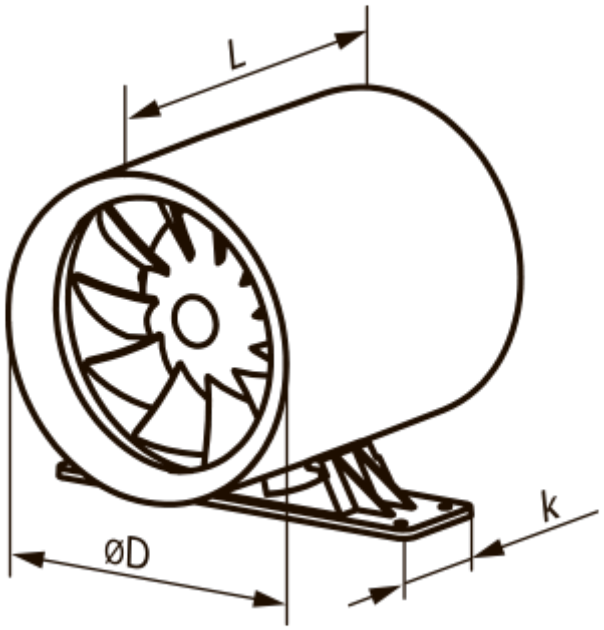

Accessories

Plastic

Name	Photo	Description
MV 120 V		Two-piece plastic grilles with angled louvers

Fittings

Name	Photo	Description
PVT 050/10		The adhesive PVC tape is an insulation tape made of plasticized PVC base covered with a glue layer
PVT 050/30		The adhesive PVC tape is an insulation tape made of plasticized PVC base covered with a glue layer
PVT 050/50		The adhesive PVC tape is an insulation tape made of plasticized PVC base covered with a glue layer
C 125		The clamps are designed for quick and reliable mounting and connection of various round ventilation system components. Clamps are made of stainless steel band

Round

Name	Photo	Description

2805		Wall mounting

Flexible ducts

Name	Photo	Description
Polyvent N		Flexible uninsulated air duct made of metallized film

Backdraft dampers

Name	Photo	Description
KO 125		Back valve is designed for domestic fan

Window vents

Name	Photo	Description
PO 400		Window ventilators for supply ventilation

Plastic

Name	Photo	Description
MV 122 VK		Supply and exhaust hoods

Metal

Name	Photo	Description
MVM 122 V N		Exhaust metal hoods

Ecodesign

Trademark	Vents					
Model	Quietline 125 T Duo					
Specific energy consumption (SEC) (kWh/(m²/a))	Cold		Average		Warm	
	-34.6	A	-16.7	E	-6.4	F
Type of ventilation unit	Unidirectional					
Type of drive installed	2-speed					
Type of heat recovery system	None					
Maximum flow rate (m³/h)	197					
Electric power input (W)	13					
Reference flow rate (m³/s)	0.04					
Specific power input (SPI) (W/(m³/h))	0.069					
Control typology	Clock control					
Maximum external leakage rates (%)	2.7					
Declared typology	RVU UVU					
Sound power level (dB(A))	49					
The annual electricity consumption (AEC) (kWh/a)	Cold		Average		Warm	
	81		81		81	
The annual heating saved (AHS) (kWh/a)	Cold		Average		Warm	
	3667		1874		848	