RKV 710, 800

Mounting frame

- Casing material: Galvanized steel

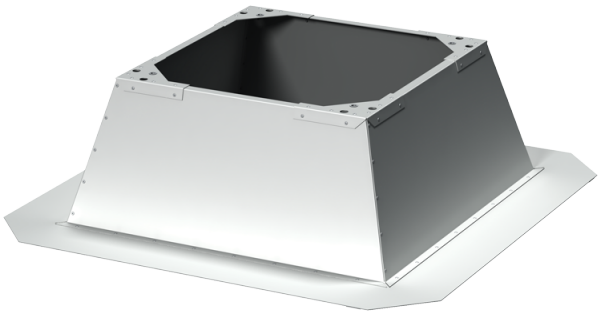

	Unit of measurement	RKV 710, 800
Weight	kg	68.5

Dimensions

B	B1	H	L	L1
1262	902	600.0	962	840

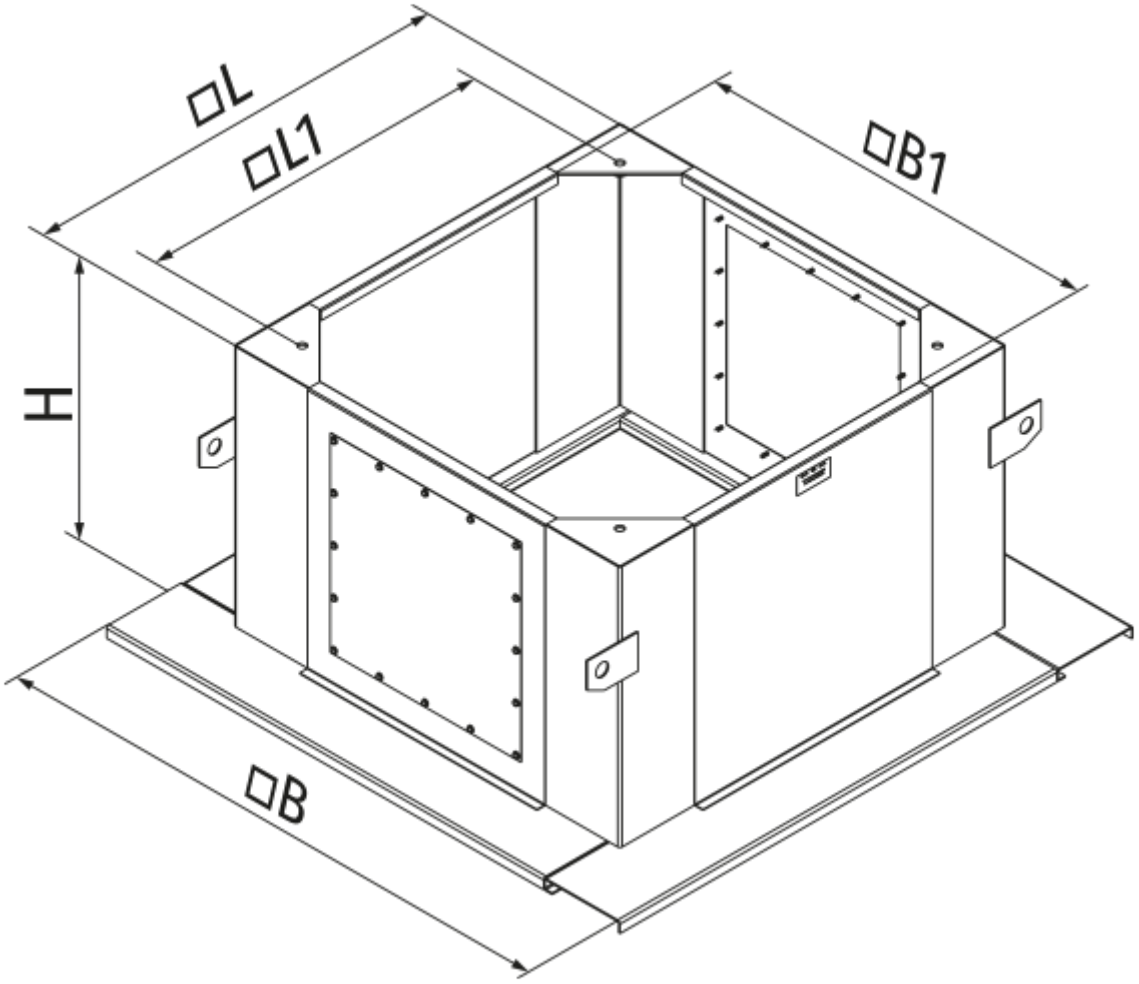
□L
□L1
□B1
H
□B