RKVI 220-225

Mounting frame with thermal-insulating layer

• Casing material: Galvanized steel

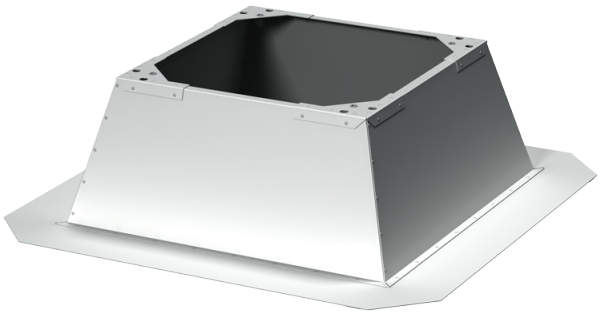

	Unit of measurement	RKVI 220-225
Weight	kg	13.8

Dimensions

B	B1	H	L	L1
720	254	300.5	301	245

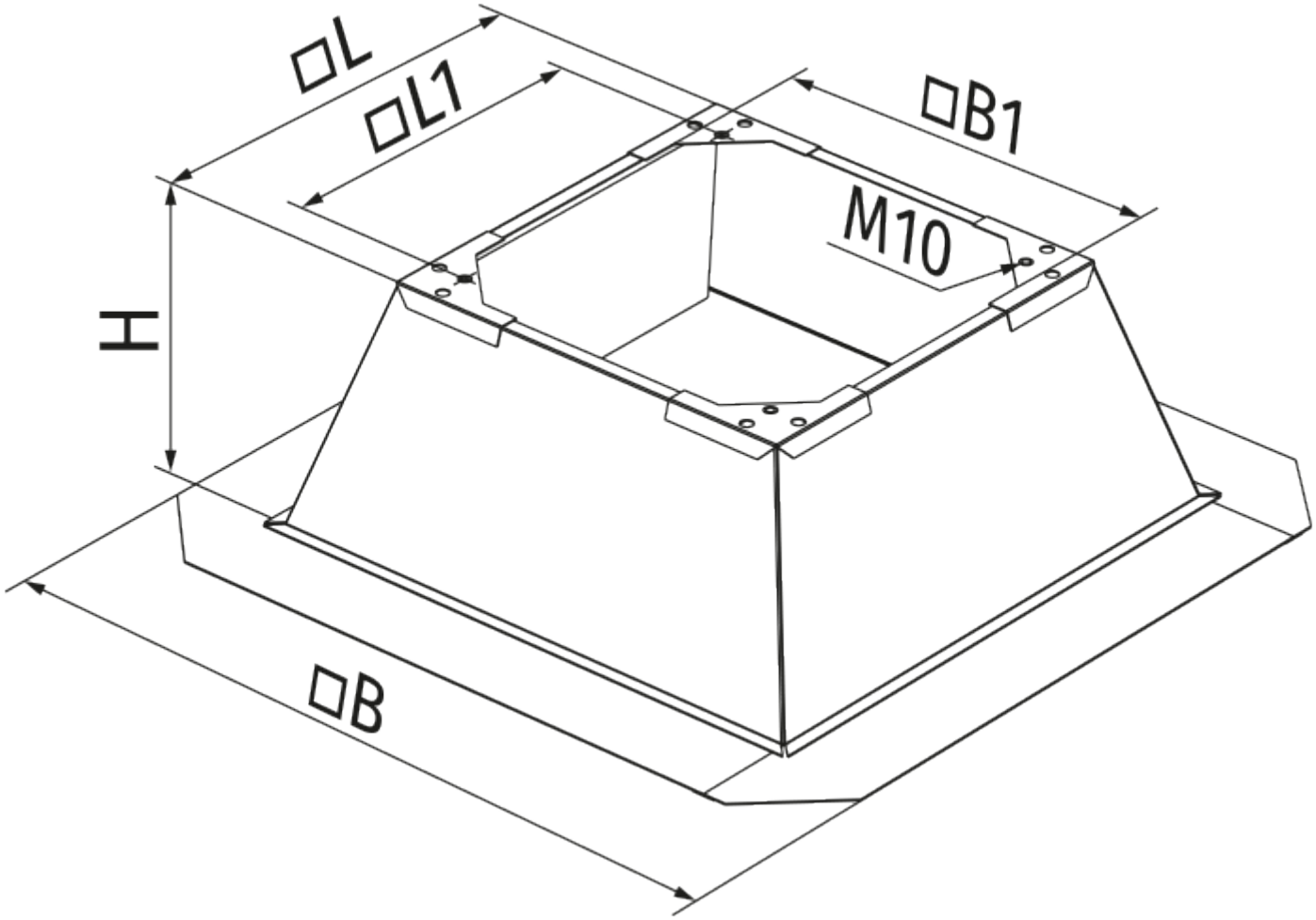
□L
□L1
□B1
M10
H
□B