RM-1

Mounting frame for ERV fan



	Unit of measurement	RM-1
Weight	kg	27.9

Dimensions

H	A1	A2	L1	L2	L3	B	C
830	700	480	310	449	223	865	524

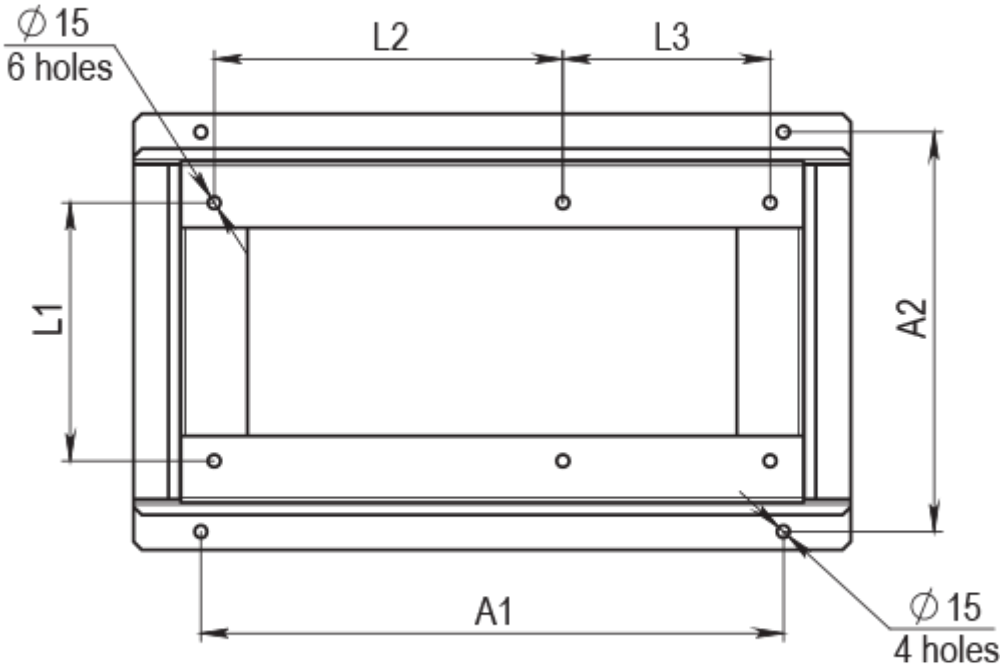
∅ 15
6 holes
L2
L3
L1
A2
A1
∅ 15
4 holes

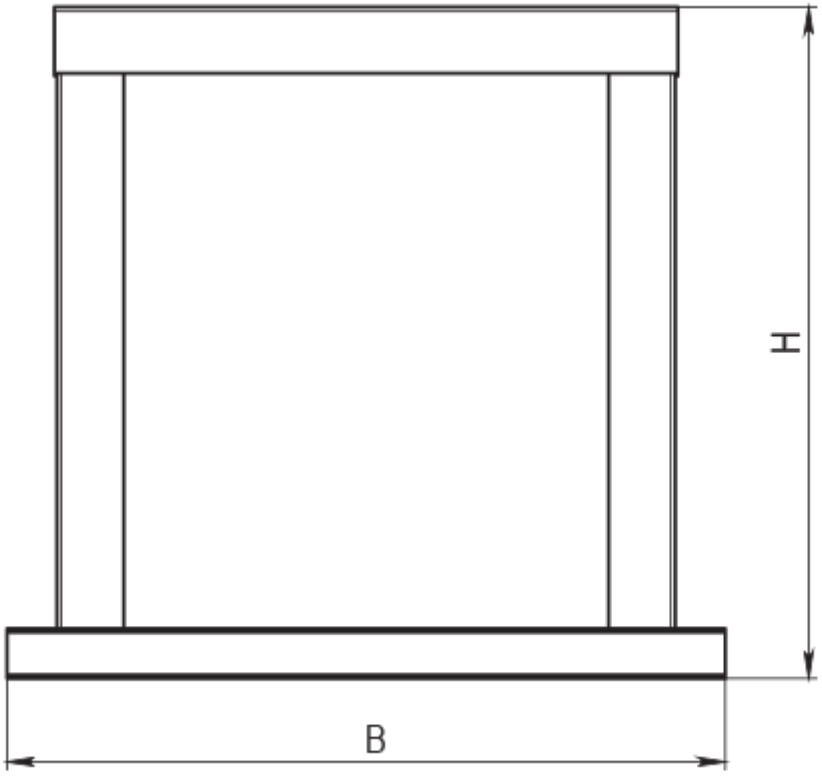
H
B

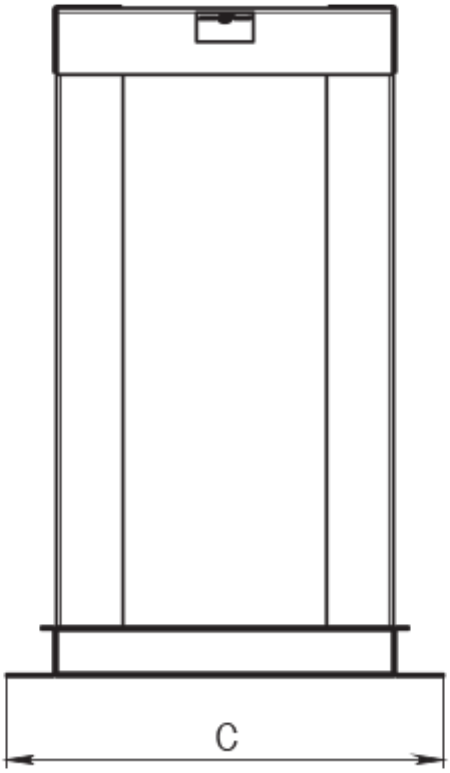
C