RM-2

Mounting frame for ERV fan



	Unit of measurement	RM-2
Weight	kg	27.6

Dimensions

H	A1	A2	L1	L2	L3	B	C
807	700	480	310	479	249	862	524

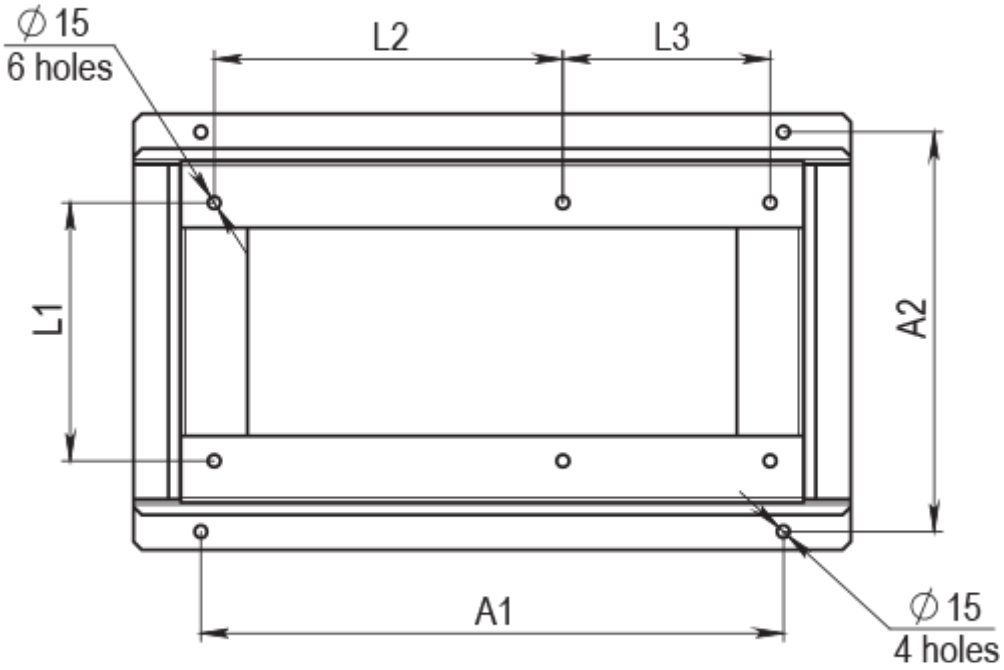
∅ 15
6 holes
L2
L3
L1
A2
A1
∅ 15
4 holes

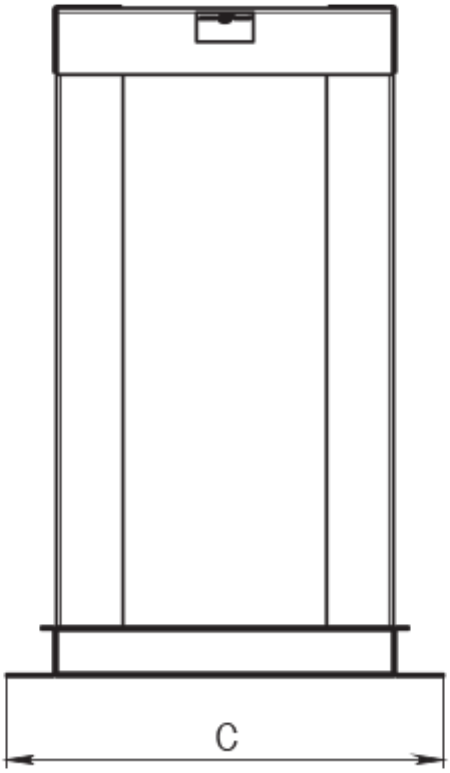
C

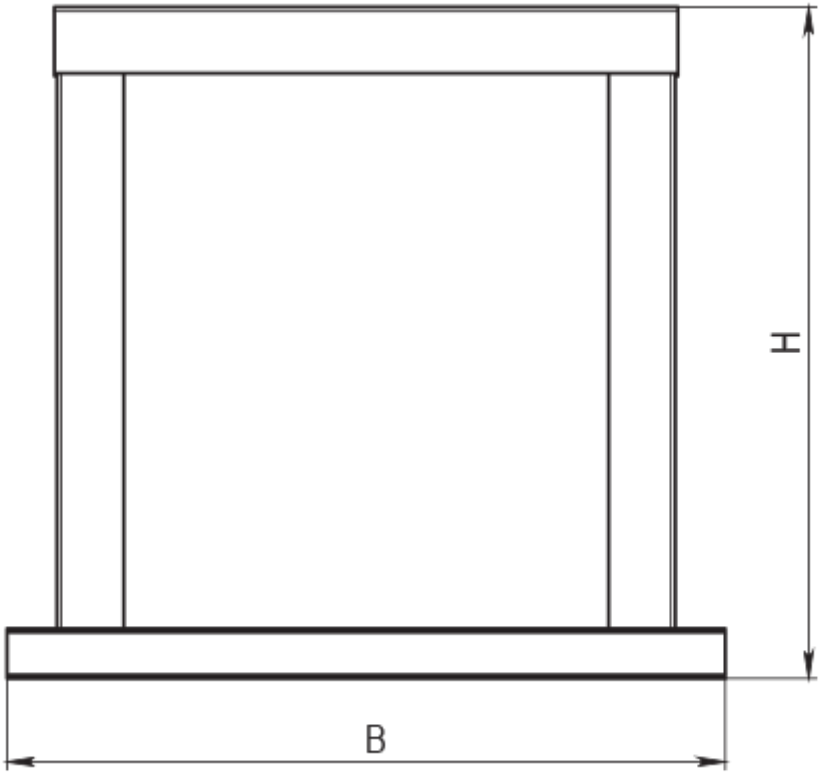
H
B