RM-3

Mounting frame for ERV fan



	Unit of measurement	RM-3
Weight	kg	28.8

Dimensions

H	A1	A2	L1	L2	L3	B	C
741	820	520	350	523	269	986	564

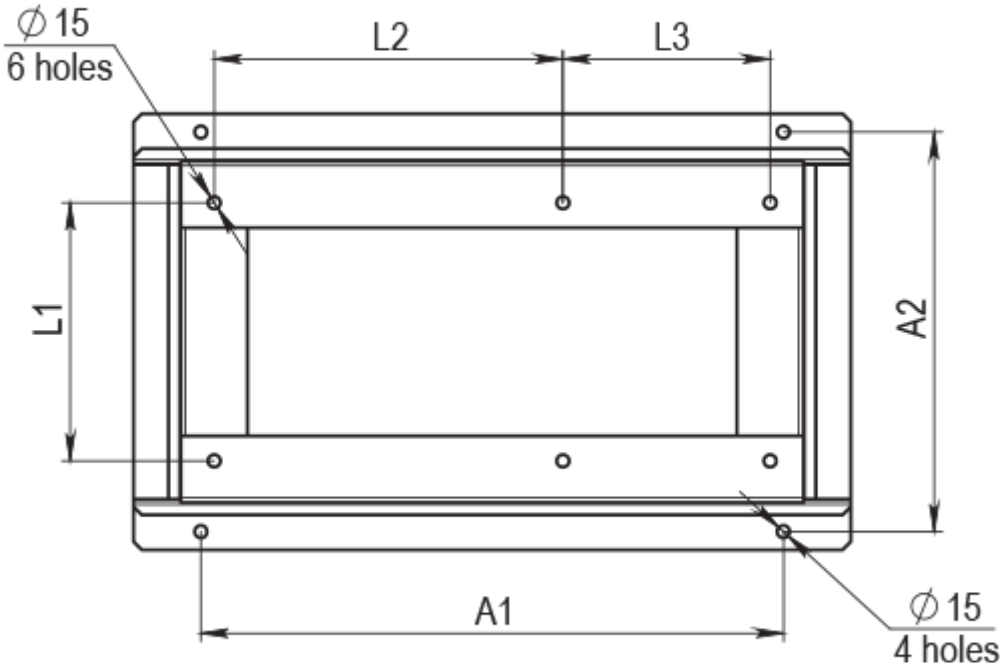
∅ 15
6 holes
L2
L3
L1
A2
A1
∅ 15
4 holes

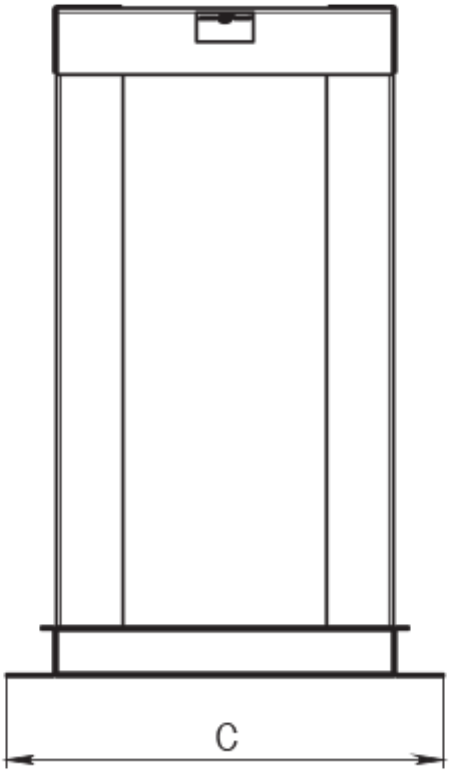
C

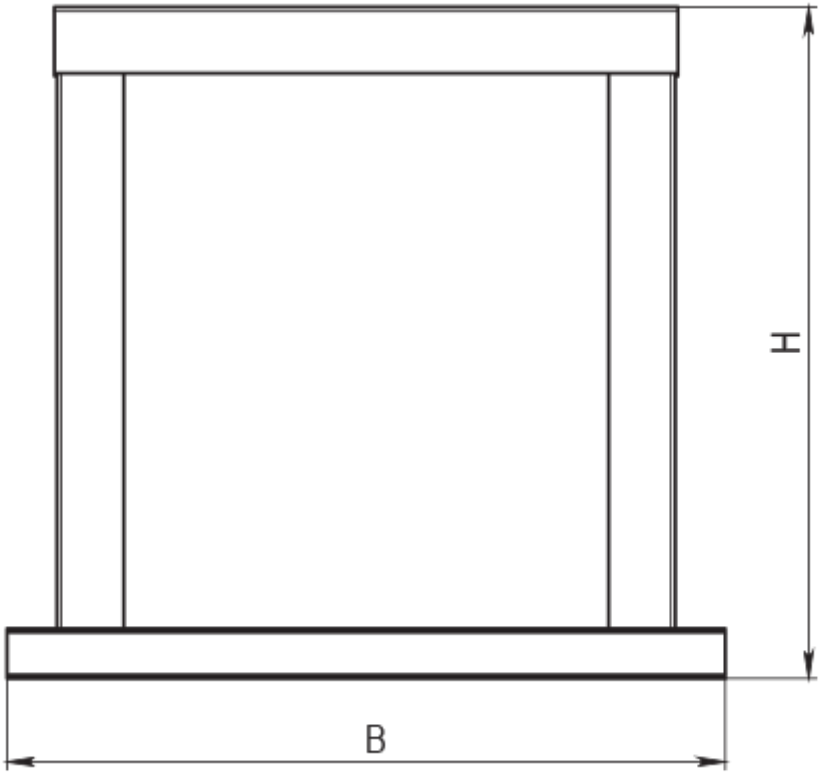
H
B