RM-4

Mounting frame for ERV fan



	Unit of measurement	RM-4
Weight	kg	27.4

Dimensions

H	A1	A2	L1	L2	L3	B	C
710	700	520	350	418	302	914	564

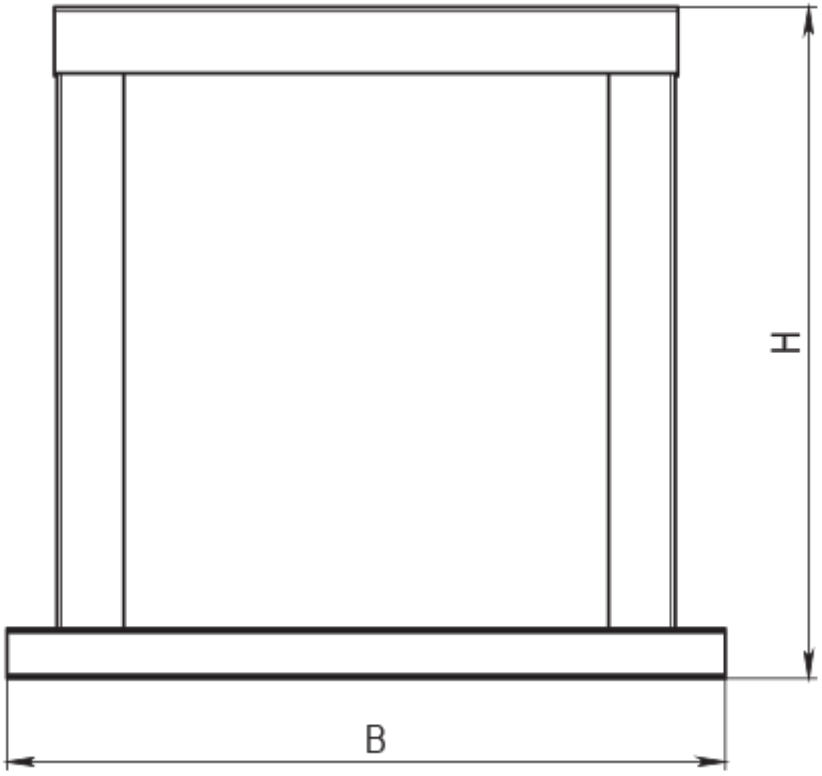
H
B

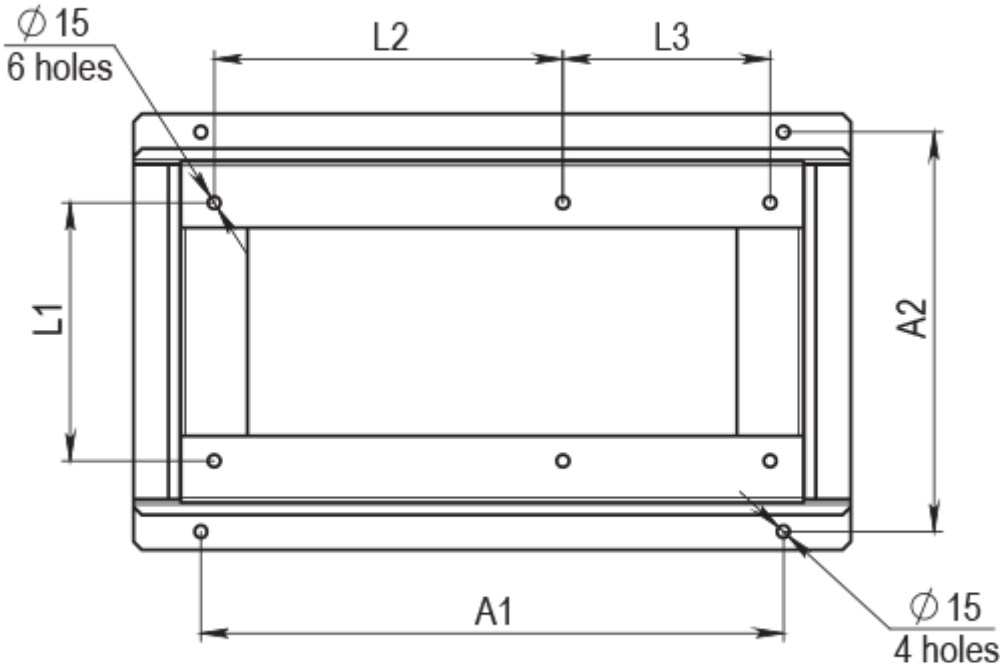
∅ 15
6 holes
L2
L3
L1
A2
A1
∅ 15
4 holes

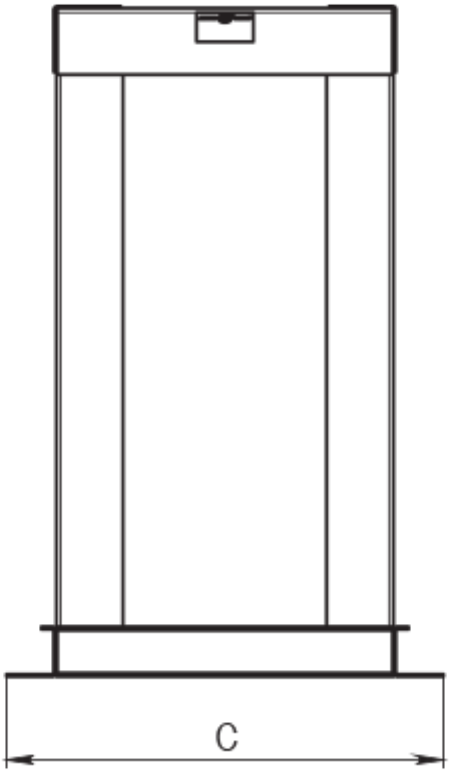
C