RM-5

Mounting frame for ERV fan



	Unit of measurement	RM-5
Weight	kg	27.5

Dimensions

H	A1	A2	L1	L2	L3	B	C
800	700	480	310	419	249	862	524

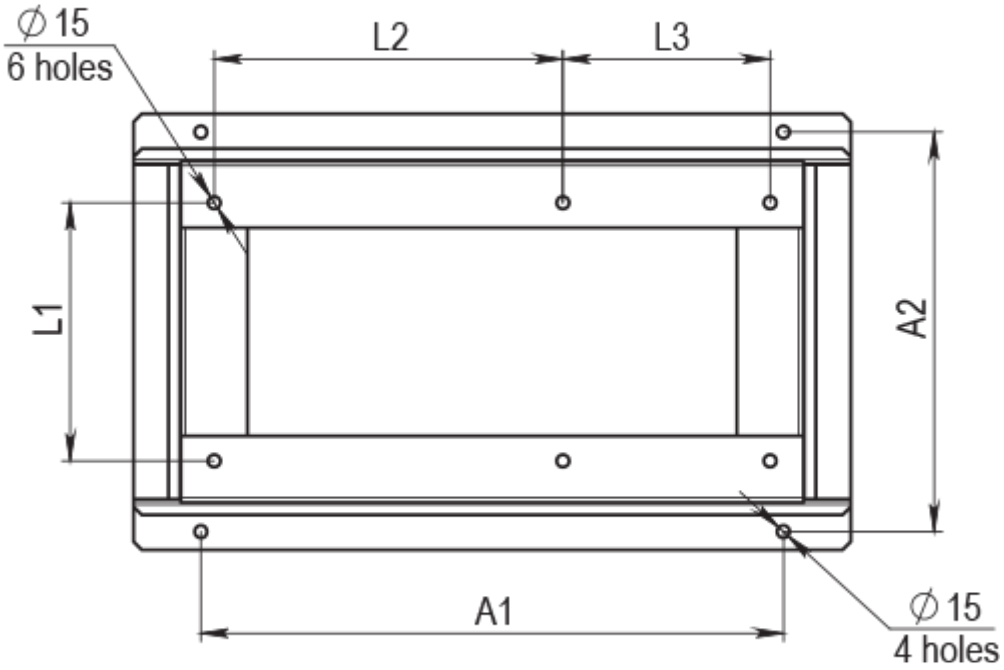
∅ 15
6 holes
L2
L3
L1
A2
A1
∅ 15
4 holes

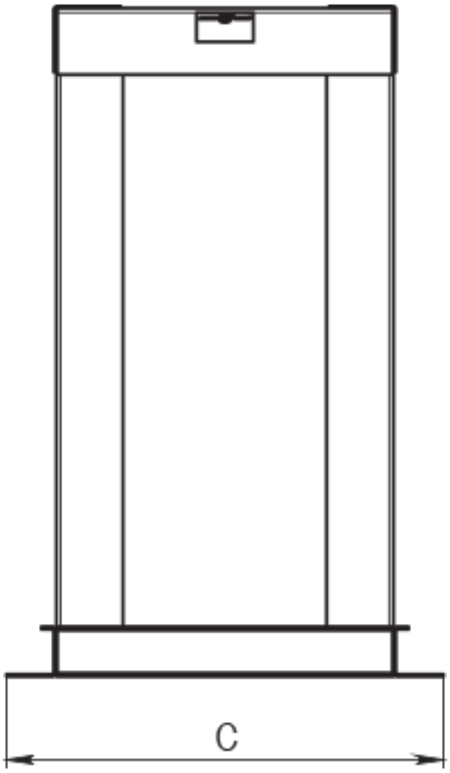
C

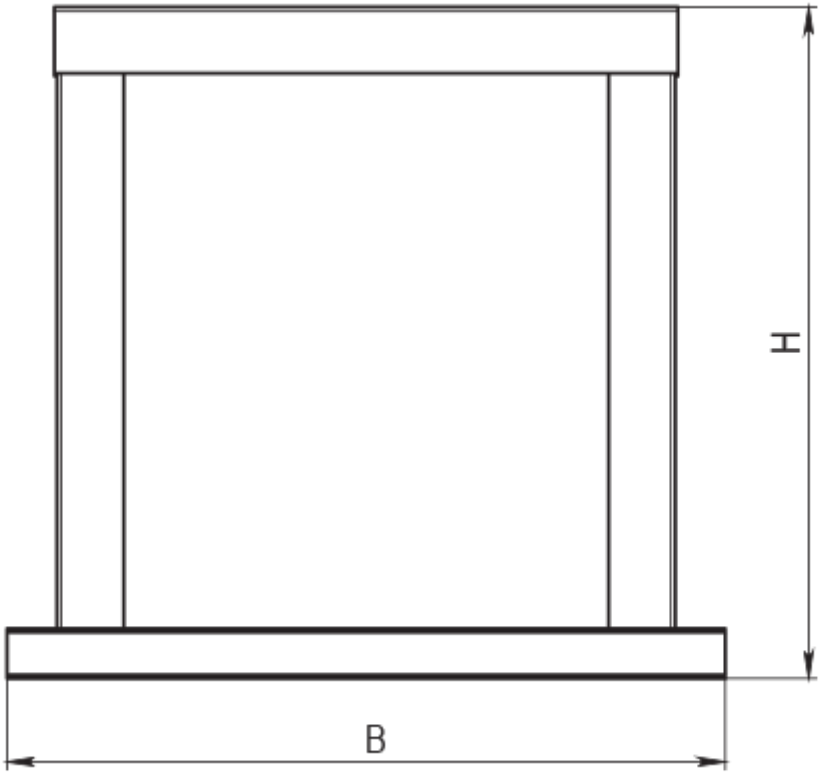
H
B