RM-M-200-H

Mounting frame for small electrically and manually driven fan ERV-M

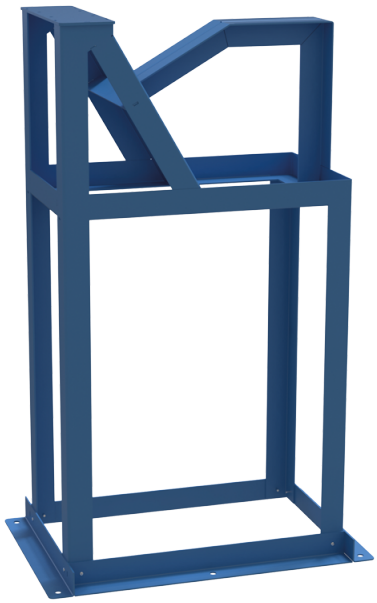

	Unit of measurement	RM-M-200-H
Weight	kg	25

Dimensions

A	B	C	F	H
480	705	430	328	1075

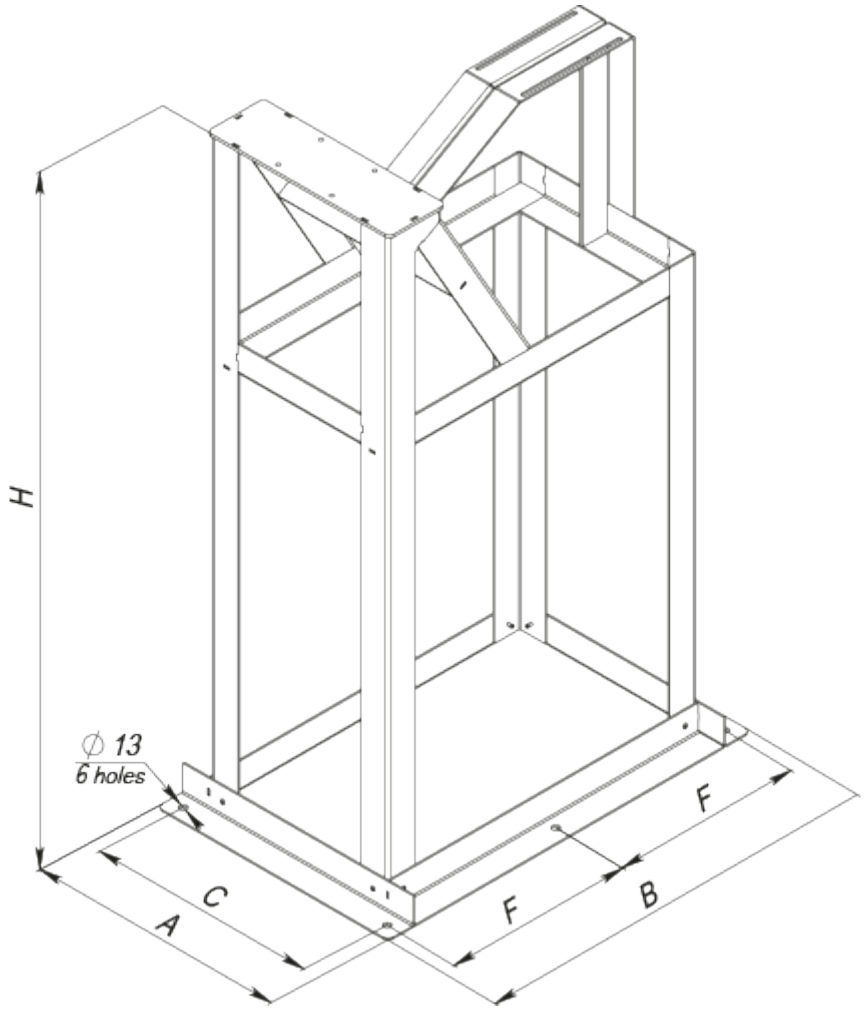
H
∅ 13
6 holes
A
C
F
F
B