RRV 800x500

Air flow controllers

• Casing material: Galvanized steel



	Unit of measurement	RRV 800x500
Weight	kg	8.8

Dimensions

B	B1	B2	B3	H	H1	H2	L
800	820	840	940	500	520	540	170

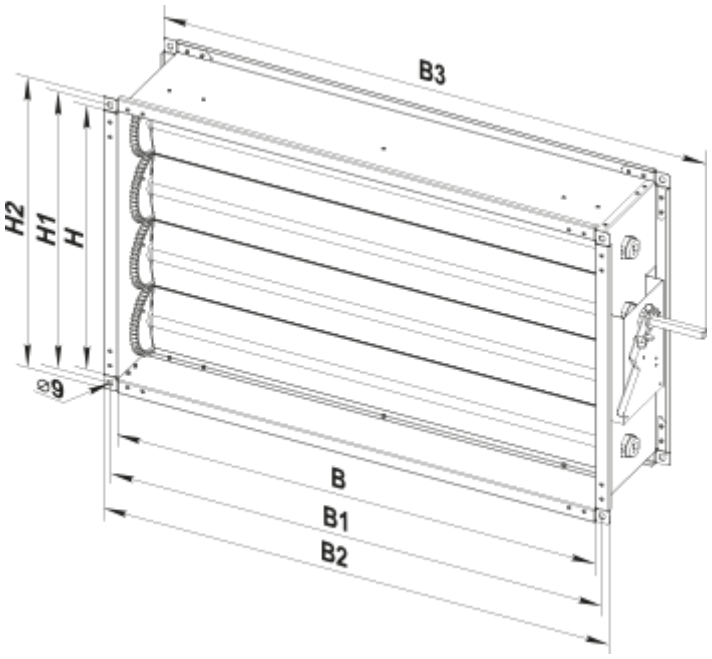
B3
H2
H1
H
⌀9
B
B1
B2