RZG-150

Adjusting plug

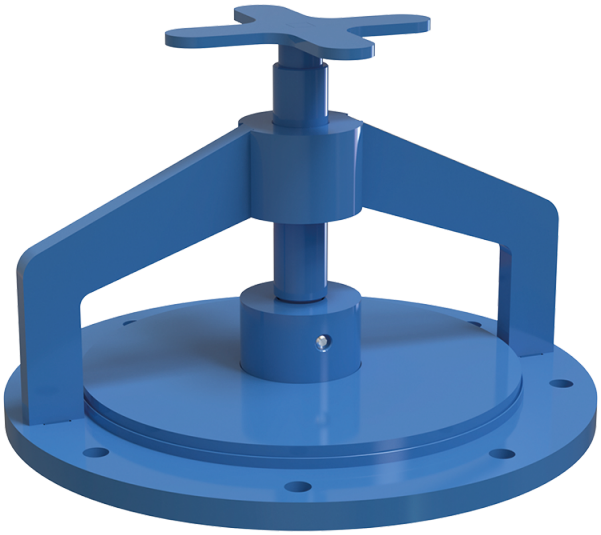

	Unit of measurement	RZG-150
Connected air duct size	mm	150
Weight	kg	3.74

Dimensions

A	B	C
220	195	150

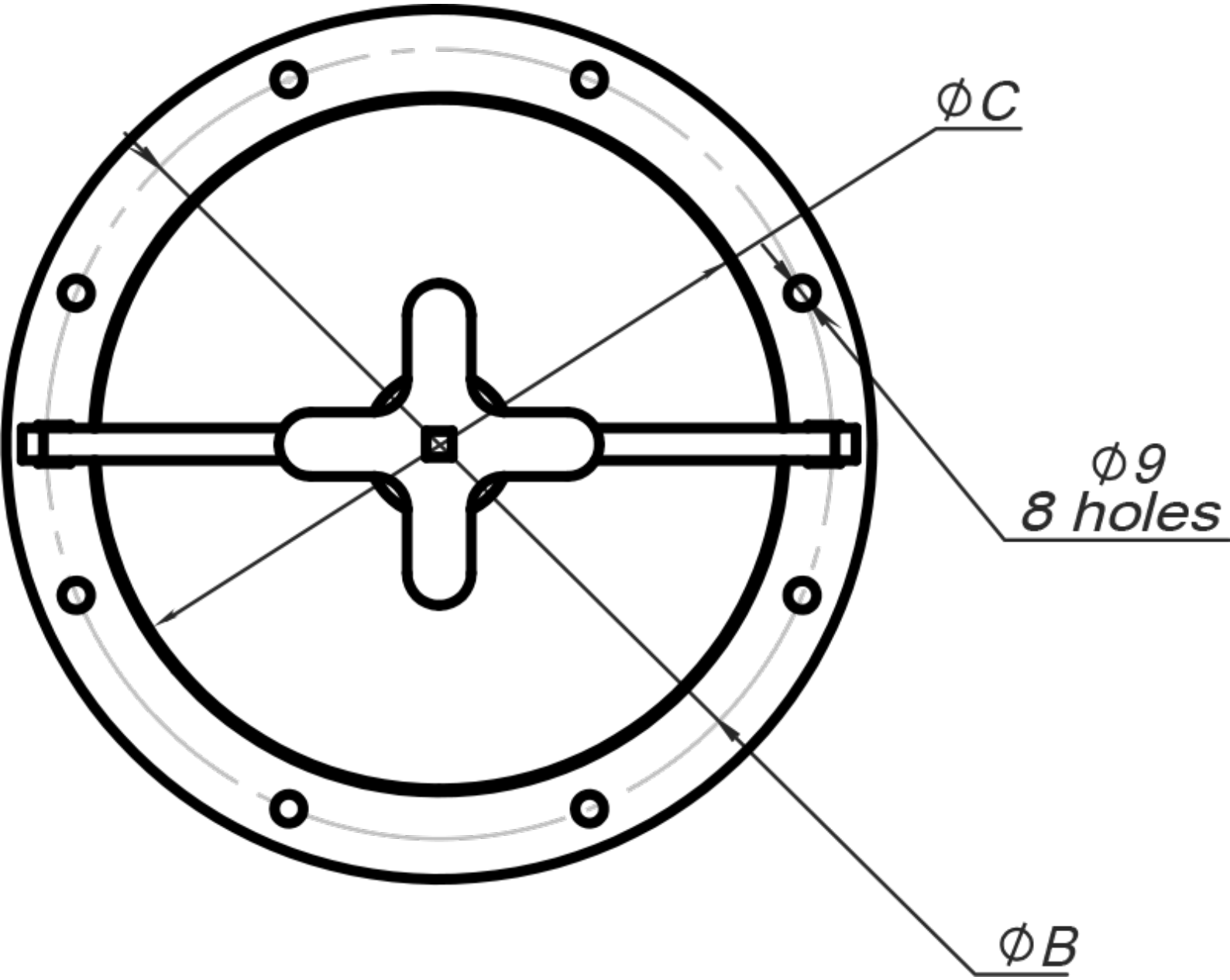
ØC
Ø9
8 holes
ØB

View on plug when open

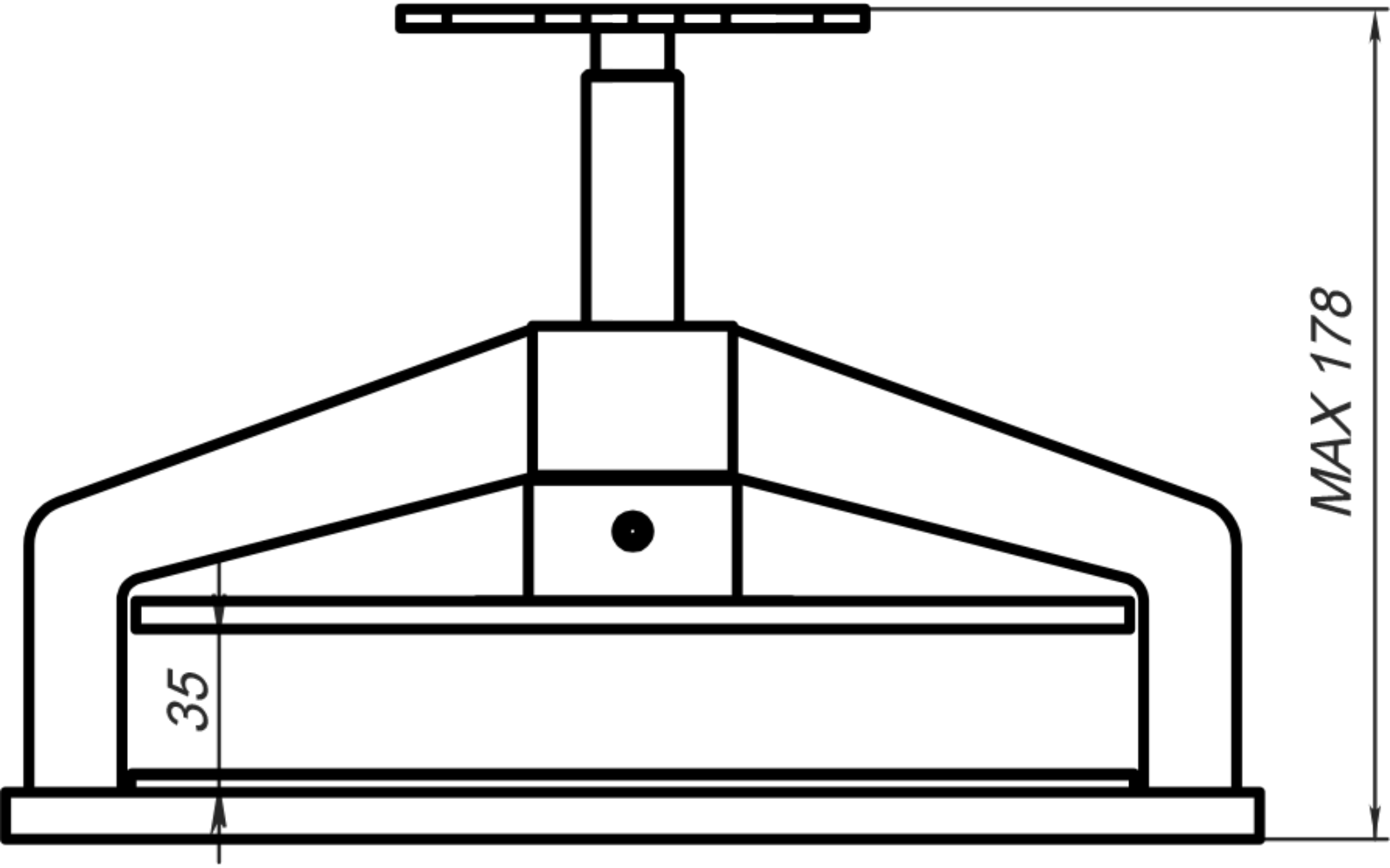

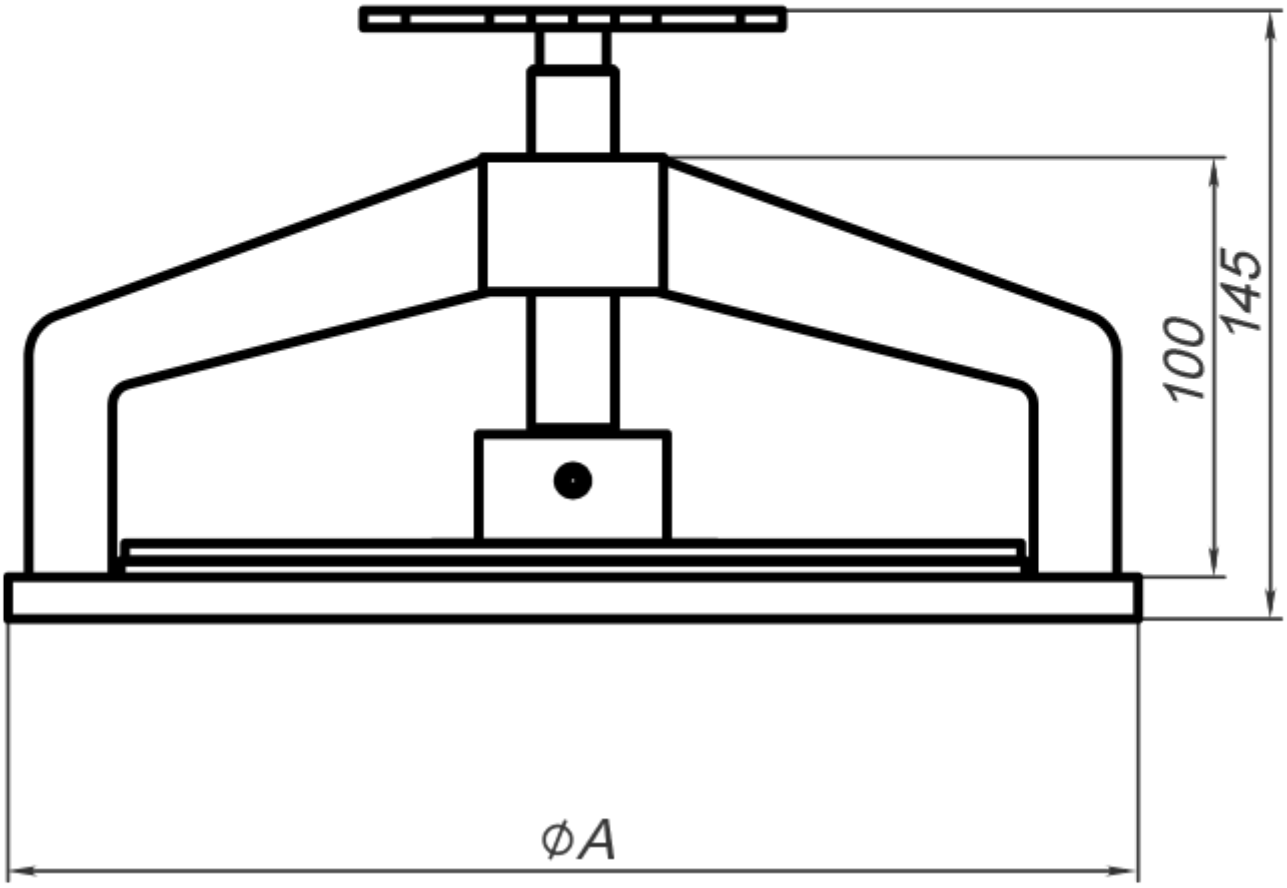
100
145
ØA