RZG-200

Adjusting plug

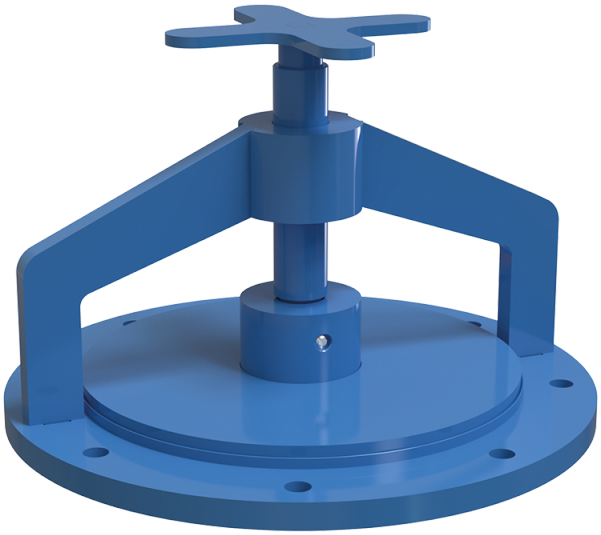

	Unit of measurement	RZG-200
Connected air duct size	mm	200
Weight	kg	4.94

Dimensions

A	B	C
270	245	200

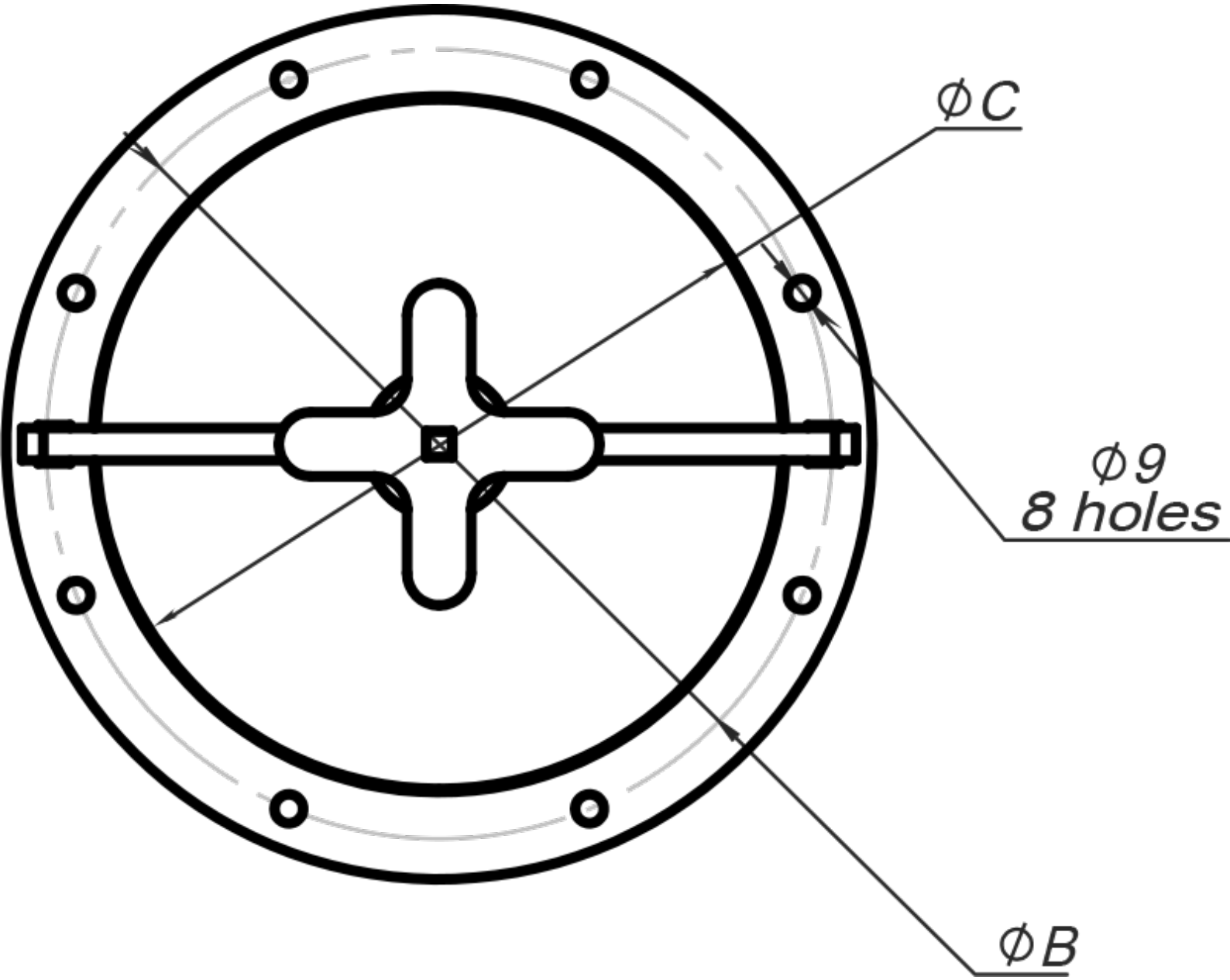
ØC
Ø9
8 holes
ØB

View on plug when open

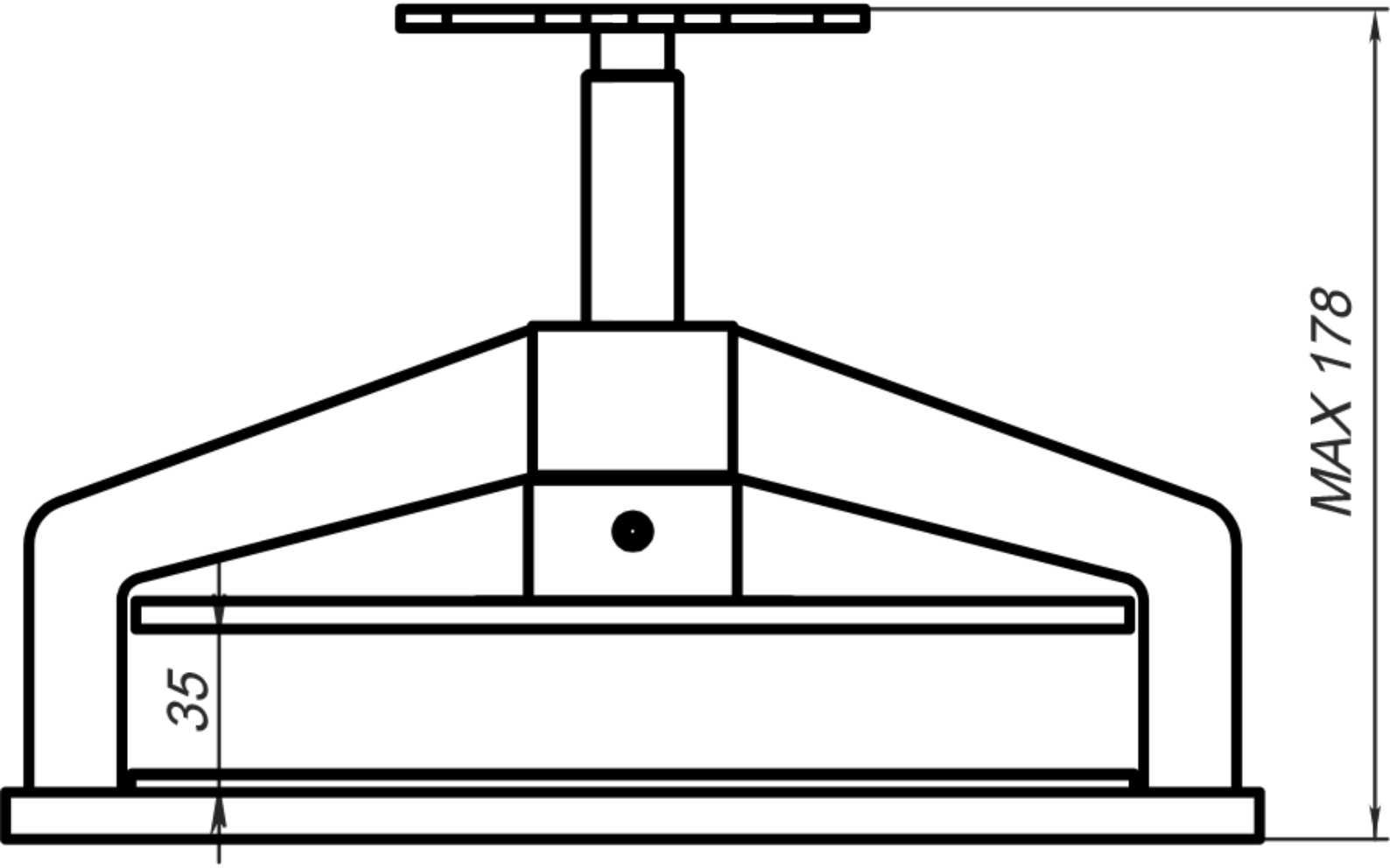

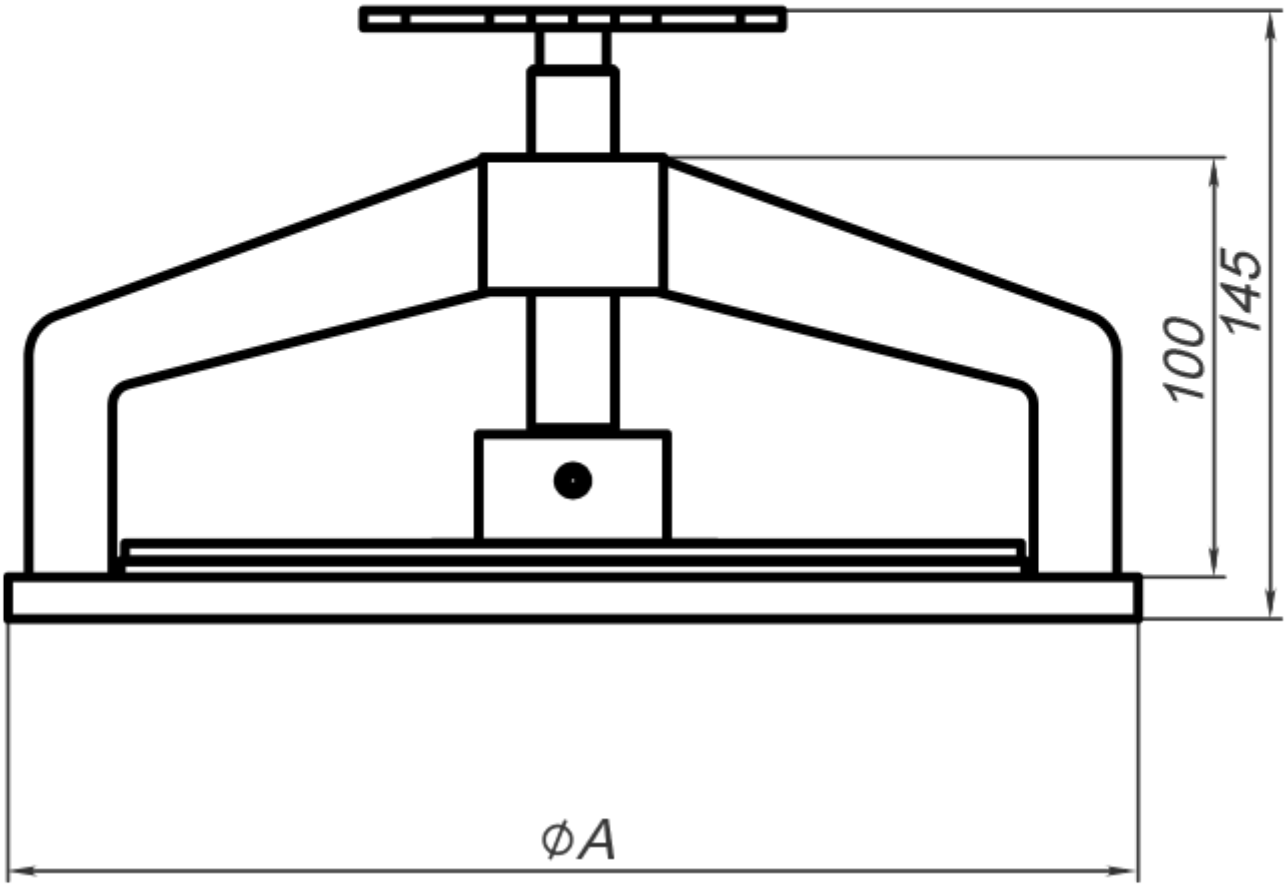
100
145
ØA