Saddle 1000/1000

Saddle for straight air duct segment



	Unit of measurement	Saddle 1000/1000

Dimensions

d1	d2	l
1000	1000	100

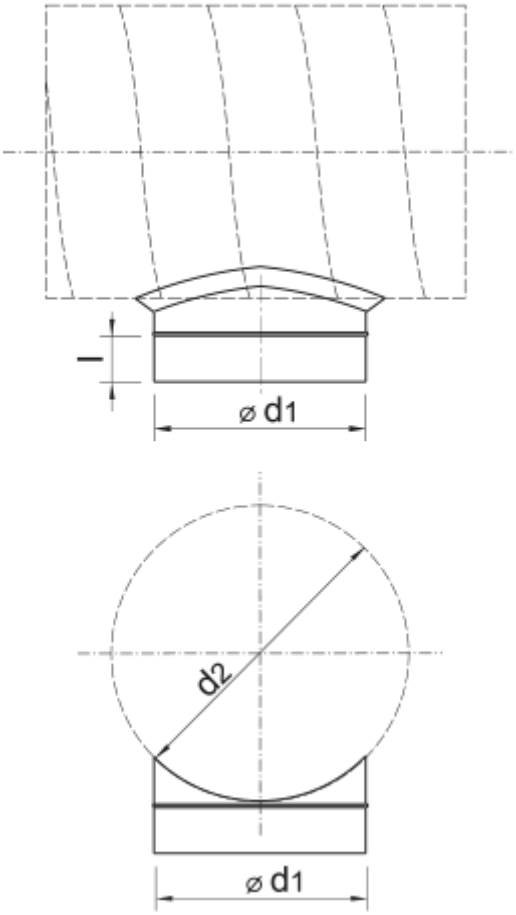
l
⌀ d1
d2
⌀ d1