Saddle 1000/710

Saddle for straight air duct segment



	Unit of measurement	Saddle 1000/710

Dimensions

d1	d2	l
710	1000	100

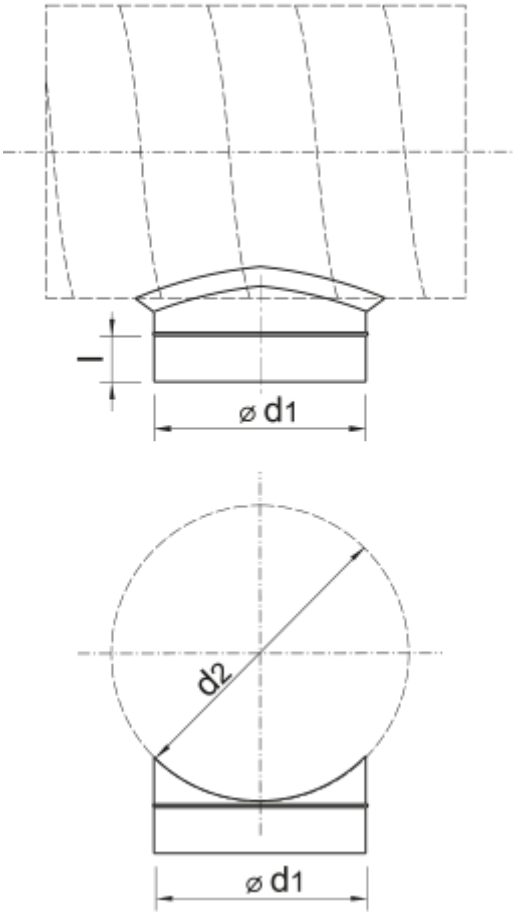
l
⌀ d1
d2
⌀ d1