# Saddle 1000/800

Saddle for straight air duct segment



| | Unit of measurement | Saddle 1000/800 |
|---|---|---|

## Dimensions

| d1 | d2 | l |
|---|---|---|
| 800 | 1000 | 100 |

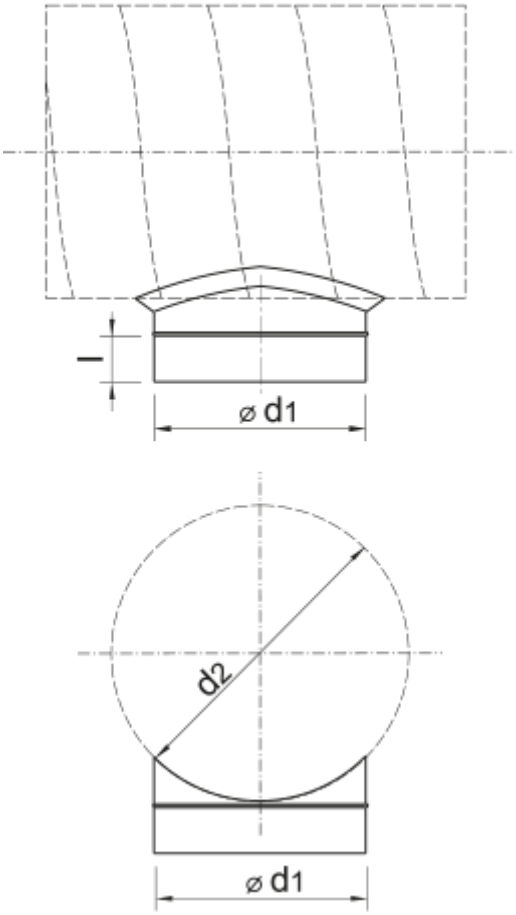
l
⌀ d1
d2
⌀ d1