Saddle 1000/900

Saddle for straight air duct segment



	Unit of measurement	Saddle 1000/900

Dimensions

d1	d2	l
900	1000	100

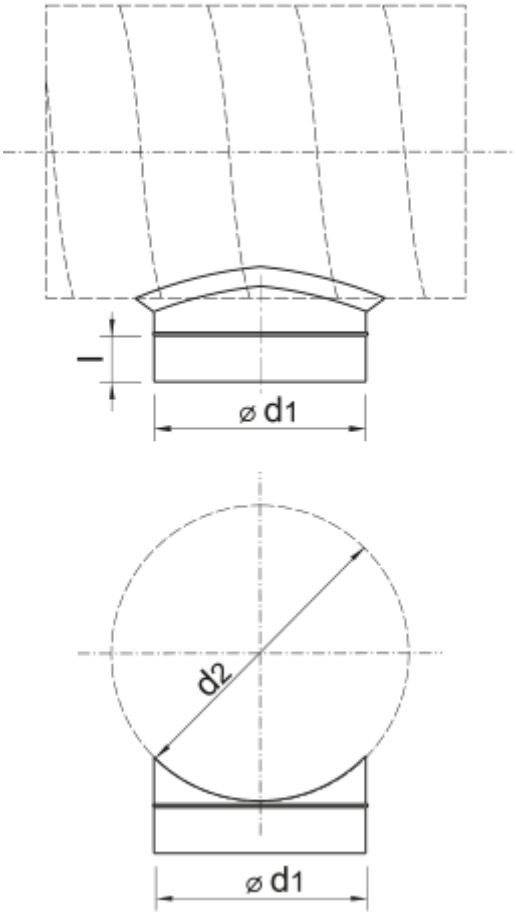
l
⌀ d1
d2
⌀ d1