Saddle 1250/630

Saddle for straight air duct segment



	Unit of measurement	Saddle 1250/630

Dimensions

d1	d2	l
630	1250	100

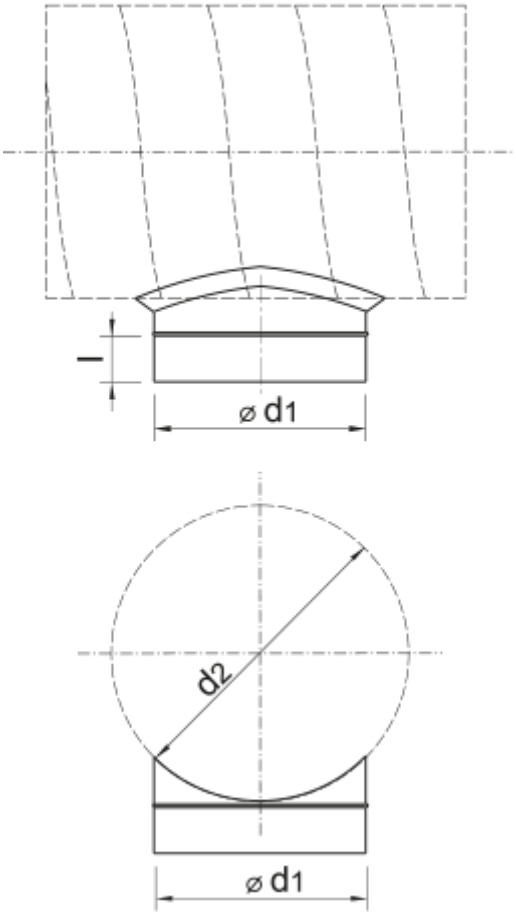
l
⌀ d1
d2
⌀ d1