# Saddle 315/125

Saddle for straight air duct segment



| | Unit of measurement | Saddle 315/125 |
|---|---|---|

## Dimensions

| d1 | d2 | l |
|---|---|---|
| 125 | 315 | 50 |

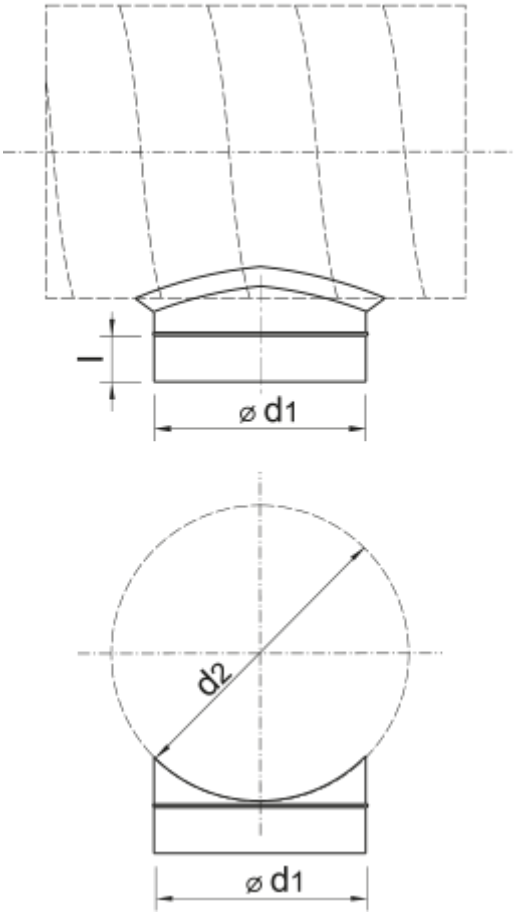
l
⌀ d1
d2
⌀ d1