Saddle 315/160

Saddle for straight air duct segment



	Unit of measurement	Saddle 315/160

Dimensions

d1	d2	l
160	315	50

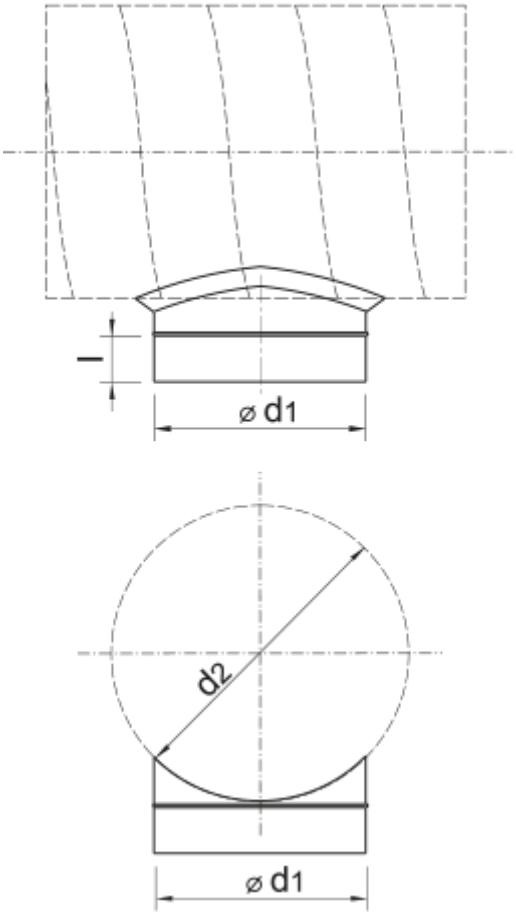
l
⌀ d1
d2
⌀ d1