Saddle 355/355

Saddle for straight air duct segment



	Unit of measurement	Saddle 355/355

Dimensions

d1	d2	l
355	355	60

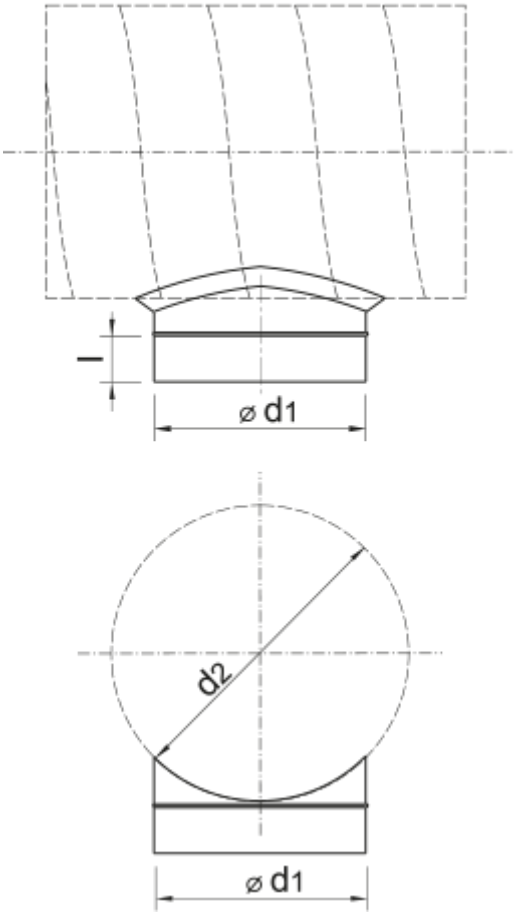
l
⌀ d1
d2
⌀ d1