Saddle 450/200

Saddle for straight air duct segment



	Unit of measurement	Saddle 450/200

Dimensions

d1	d2	l
200	450	60

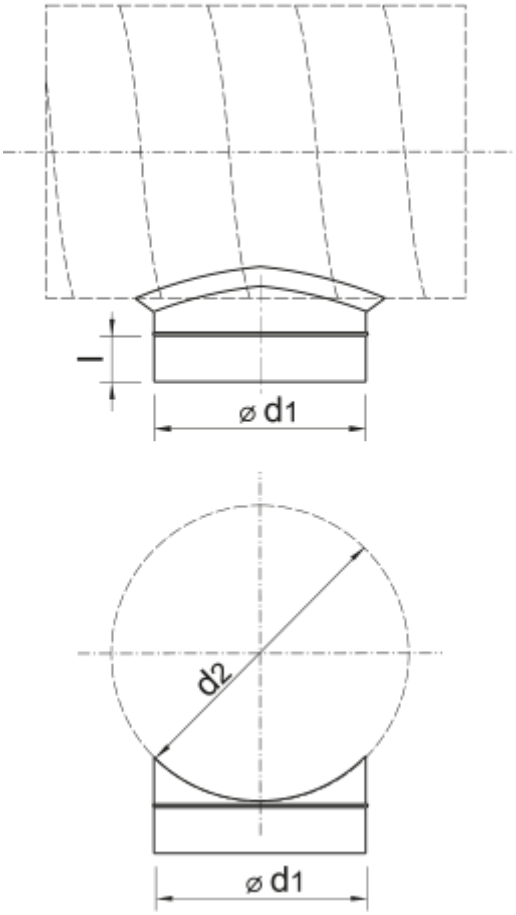
l
⌀ d1
d2
⌀ d1